CONTROL VALVES

PRODUCT CATALOGUE

HABONIM
An ITT Company

PERFORMING IN DEMANDING APPLICATIONS

PERFORMING IN DEMANDING APPLICATIONS

Ball Valves & Actuators for the most demanding, challenging and hazardous applications is our passion and profession for the last 70 years. We believe in designing, manufacturing and supplying control and shutoff components and solutions that improves the overall safety, integrity and sustainability of the systems they are installed in.

Designed, manufactured and tested according to the highest standards, our products allow us to partner within systems that flows and control varied gases and liquids in divers markets especially where extreme temperatures and pressures are involved, hazardous materials are used and system performances are critical.

We are leading in cryogenic ball valve-based control solutions, emergency shutoff ,High Pressure and Severe Service and specially designed solutions. Believing that supplying and developing the most effective, safe and reliable products for the global leaders in the Gas distribution Severe Service and BioTech markets continually challenges us to improve our capabilities and products. Best coping with our prestigious customers' most challenging requirements technically, operationally and commercially is the outcome and our contribution to the development of these high end markets.

Table of contents

About Habonim 6

Habonim Valves 11

Control Valves 37

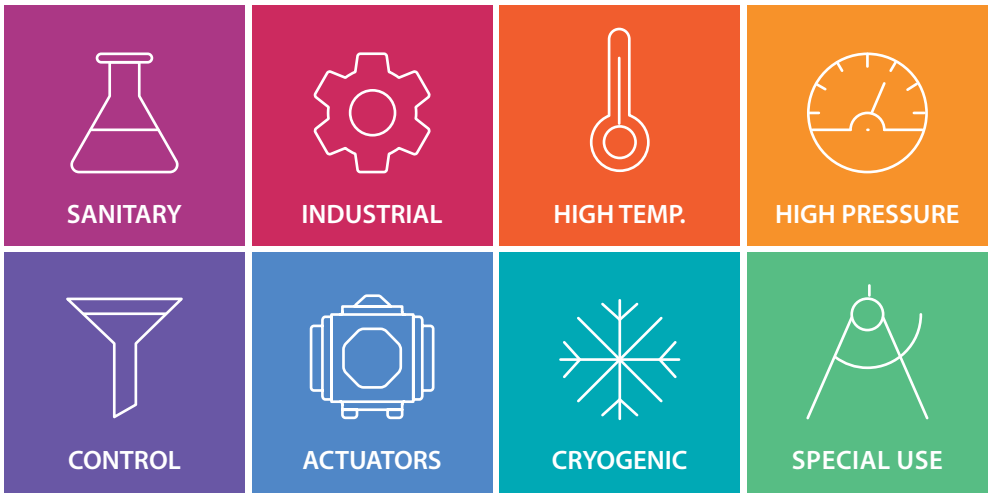

HOW TO USE THIS CATALOGUE

This catalogue provides information in a hierarchical structure starting from Habonim company general information, product families, product lines, product series and to a single product data.

When using information of any level, the aggregate information of the levels above would apply and should be taken into consideration where applicable.

Online Version

A live and up-to-date electronic version of this catalog is available for online use and download on Habonim: www.habonim.com

In the case of discrepancies between the print and electronic versions, we recommend to use the latest version (the version date is printed on the back cover).

Proprietary Note

This catalog is the exclusive property of Habonim Industrial Valves and Actuators Ltd. Any unauthorized reproduction of this catalog, in whole or in part, shall be prosecuted.

Disclaimer

The products and datasheets in this catalog reflect current Habonim standard production specifications. Habonim Industrial Valves and Actuators Ltd. Reserves the right to modify products and materials, including modifications undertaken to comply with specific customer requests and technical specifications without further notice.

It is always the system designer and the end-user responsibility to verify all equipment use in their system is properly selected to ensure safety and integrity of their systems. Habonim offers only general information based on common market knowledge and standard market adaptations for its valves. For each system and use, the system designer and end-user must consider the particular operations conditions, media parameters and any other implication of their system for the proper selection of valves to be used on their solely responsibility.

PRODUCT FAMILIES

Temperature	
°C	°F
650	1200
600	1100
550	1000
500	900
450	800
400	750
350	650
300	550
250	480
200	390
150	300
100	200
50	120
0	32
-50	-58
-100	-148
-160	-260
-185	-300
-196	-321
-269	-450

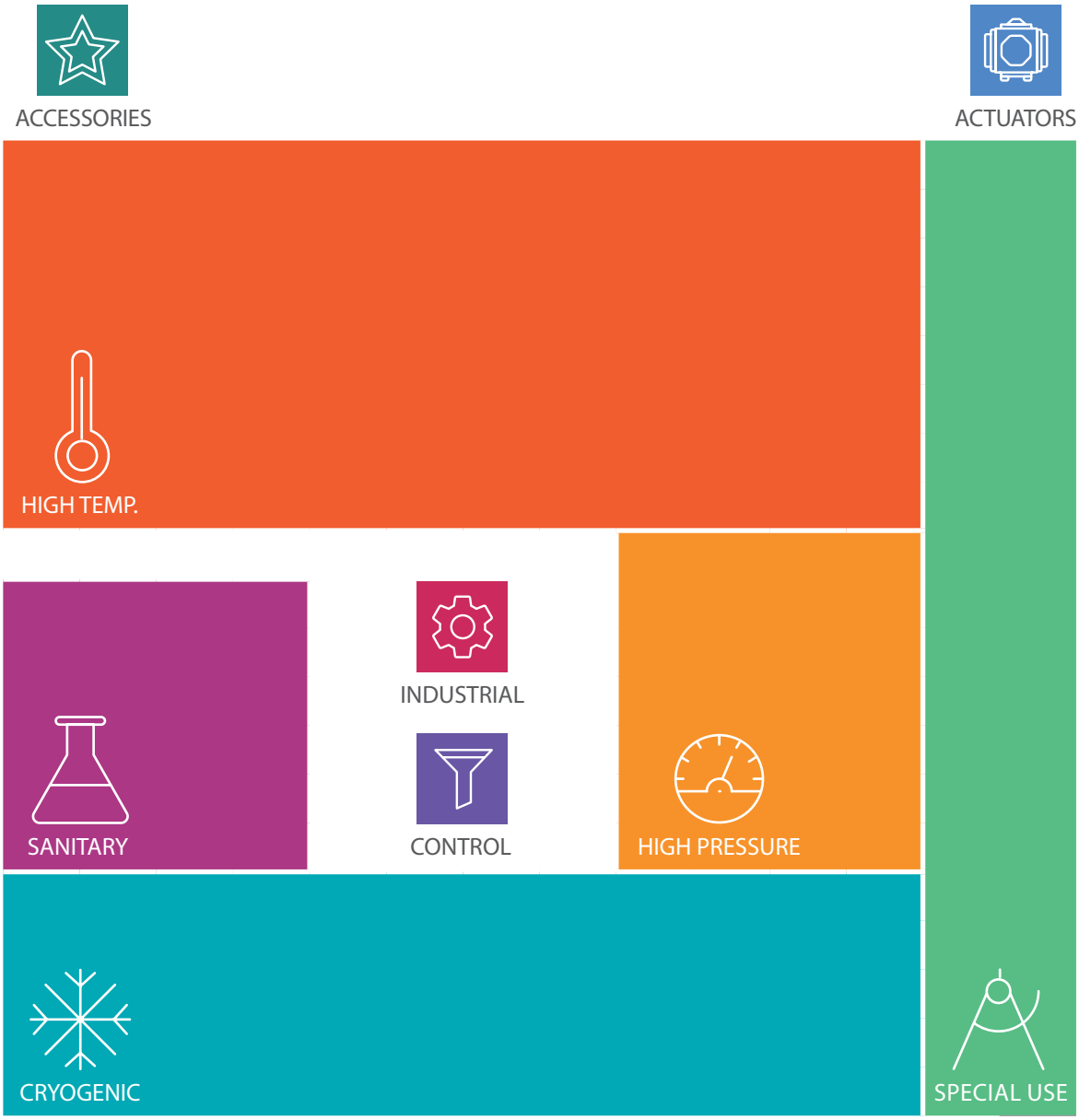

ASME Class				150		300	600	900		1500		2500		6000
Pressure Bar	-1	0	16	20	40	50	100	150	200	250	350	420	700	1034
Pressure Psi	-14	0	230	290	580	750	1500	2250	3000	3750	5000	6000	10000	15000

ABOUT HABONIM

Sustainability, Safety and Health

Habonim management and employees around the world are dedicated to promoting, in every aspect of their work, the following principles and guidelines:

Sustainability

Habonim management pledges to comply with the relevant laws, standards, and regulations to preserve the environment and promote sustainability at company premises and in our products.

Safety & Health

Habonim aspires to a safe and healthy work environment, aiming for zero work accidents and promoting our employee's wellbeing. Management and the entire workforce comply with the relevant laws and regulations necessary to achieve this goal.

Operations

Habonim operates a global infrastructure to best support customers and projects by supplying our catalog standard products, specially adjusted catalog products and custom-made products and sub-systems. Ball valves, actuators and control packages are our core deliveries.

Standard Delivery

With the goal of offering our high-end products as well as our general-use products with best availability, best quality, cost-effectiveness and with simple communication, handling and operation, we mark selected items designated as Standard Offer in most of our product lines with the Green "Standard Delivery" mark in order to provide best availability and supply readiness.

Materials

Habonim uses and stocks metallic, polymeric and other materials used in our products, all sourced from well-recognized manufacturers with the required testing, certifications and documentation.

Heat numbers and materials certificates are managed throughout the manufacturing and assembling process to enable full backtracking for our product components.

Available Certifications, some supply as standard and some per request:

- Materials certificates per EN10204 type 2.2/3.1/3.2
- FDA / USP Class VI compliant for polymers, elastomers, and lubricants where applicable
- CE1935:2004 compliant for polymers, elastomers, and lubricants where applicable

Tagging, Traceability

Each product is tagged for traceability. For product identification, a stainless steel nameplate is placed on the product body.

Traceability of assembly and testing procedures, heat codes, and foundry identification as per B16.34 stipulations where applicable.

ABOUT HABONIM

Cleaning, Assembling and Packing

Habonim manages different levels of cleaning, assembling and packing lines to meet different levels of end product and use requirements:

Commercial Service

Excessive hydrocarbon films, water, rust or mill scale, shop dirt, filings, chips or loose weld spatter is removed from the valve parts.

- Accessible surfaces are inspected for cleanliness by the naked eye under bright white light.
- Inaccessible surfaces are inspected and cleaned indirectly by wiping.
- A sticker on the package indicates the cleaning grade of the product.

Oxygen

A meticulous cleaning and assembly procedure eliminate the ignition hazards that can be caused by the presence of hydrocarbon oil, grease, and metal chips.

Our process of cleaning, assembling and packing refers to international standards in partial or in full:

- ASTM A380 • CGA G 4.1 • EN 12300

Habonim uses an environment friendly, alkaline-based degreasing process with controlled parameters. Valves are assembled in an oil-free restricted area by personnel who are specially equipped and trained to perform this task. The assembling area, work surfaces, equipment and tools are specially maintained to ensure cleanliness requirements are met.

- Valves are capped ends and plastic bagged
- A sticker on the plastic bag indicating "oxygen use"

Quality

Habonim strives to deliver quality products that meet and exceed customer expectations, providing complete and total satisfaction and to operate, instruct and train employees globally in light of standards such as:

- ISO 9001:2015
- CE PED 2014/68/EU (Module H)
- ATEX 2014/34/EU
- API SPEC Q1: 2013
- TPED 2010/35/EU and TPE - CDG 2009 – for specific product lines
- IEC 61508-2:2010 (SIL 2 / 3) – for specific product lines
- SIL IEC 61508-1,2, 2010/35/ EU – for specific product lines

Habonim's management diligently monitors goals and objectives and continually enhances processes and products as well as the safety and environmental practices in light of the above.

Testing and Laboratories

Habonim operates a wide range of testing laboratories and equipment for ongoing and R&D needs and certifies products for cryogenic, high pressure, aggressive or clean, industrial use and more.

Habonim carries out external and internal testing and certification of products per customers' requests and market trends on a regular basis and offer a wide range of certified products for diverse certification bodies as but not limited to:

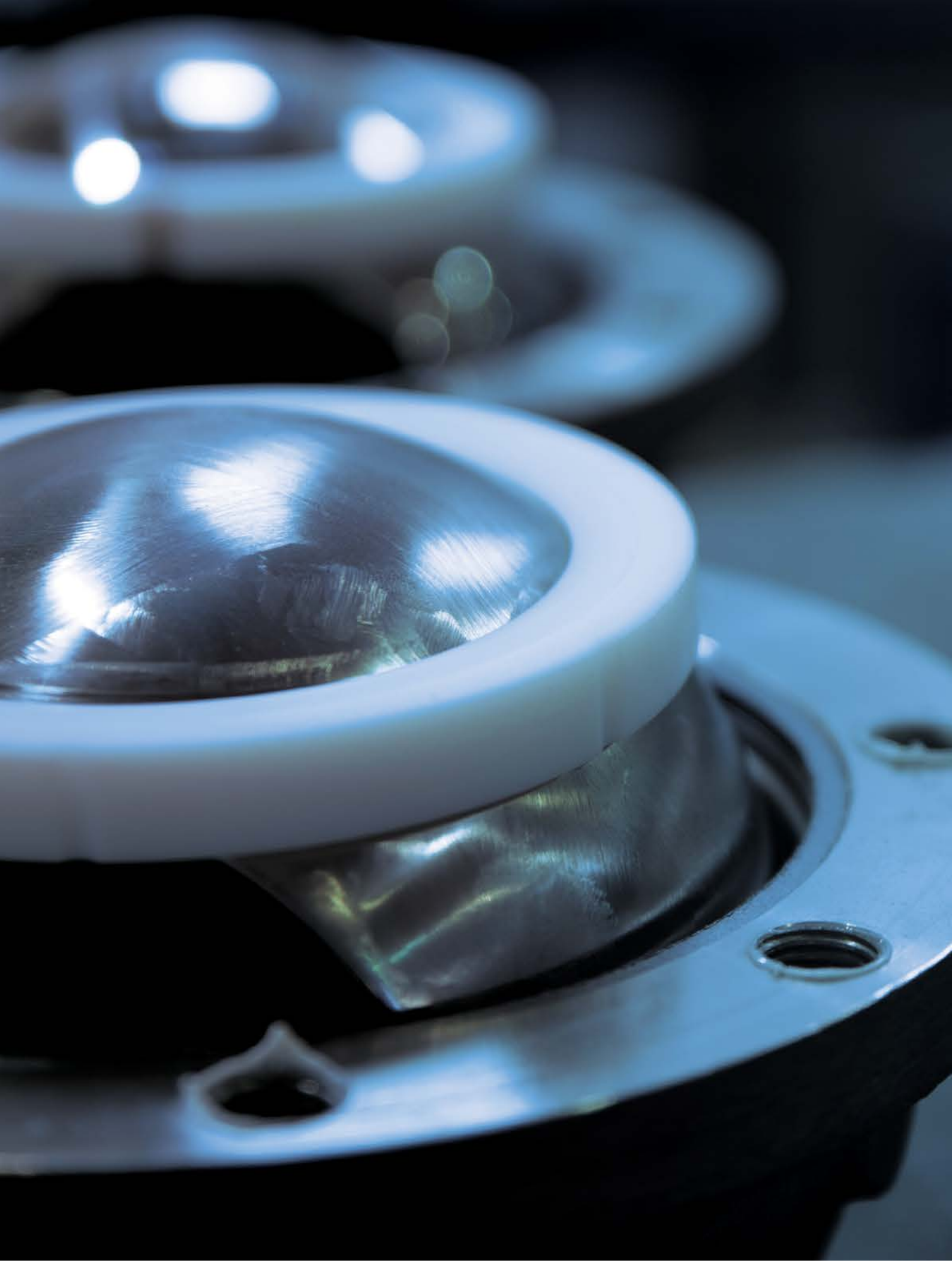

VALVES

Habonim Ball Valves 12
Valve Features 22
Control Valves 37

HABONIM BALL VALVES

General

Habonim develops, designs, manufactures, tests, supplies and service ball valves for the global market and is globally leading in some segments of ball valve usage. With high-end products, uncompromised quality, serviceability and innovation to create solutions for the most demanding applications Habonim has gained a long track record of proven success. Habonim's ball valve product line supports extreme cold to extreme heat systems, industrial use up to very high pressures, and meets the specific needs and regulations of a wide range of industries.

Habonim ball valve product lines are subject to the company's regulation, methodologies and certification – for more information, see Habonim introduction chapter.

Design and Engineering

Habonim designs its valves with accordance to international standards and guidelines in full, partial or with reference to. For some an external certification is available:

- API 6D (number 6D-1278)
- ASME VIII Div I
- API608
- ASME B16.34
- ISO 14313
- ISO 17292
- ASME BPE (48SER)
- ISO 15848-1, API641
- Fire safe design per API 607, ISO 10497, API6FA
- Antistatic design per ISO 17292

For relevant valves, Habonim complies or use as guidelines market leading standards such as, but not limited to:

- NACE MR-0175
- NDT/DT (according to ASME B16.34)
- MSS SP-55
- Polymers per TSE/BSE, BAM, FDA, USP, CE1935:2004

Testing

Habonim refers to the following international standards for valve testing:

- API 598
- ISO 15848-2
- API6D
- EN 12266-1/2
- ISO 5208

Strength/Valve shell leak test:

- Tested per quality system procedures
- By usage of compressed air, nitrogen or water

In-Line Leak Test:

- 100% of valves are tested
- By compressed air, nitrogen or helium
- At 5-7 bar pressure
- Pass criteria:
  - Rate A result (bubble tight shutoff) for soft seated valves

Functional Test:

- 100% of valves are tested
- Torque is tested to design limits

Packing

Habonim valves are delivered as a standard as:

- Valve in open position
- Actuated valves are delivered in fail-safe position
- Ends are capped
- A firm, clean package packed by soft, clean, shock-absorbing material for transportation protection.

HABONIM BALL VALVES

Registered EU Design
015025978-0001

Total HermetiX®

As a standard, most of HABONIM valves are equipped with the Total HermetiX integrity package comprised of three main elements and a superior inline sealing mechanisms in some of them:

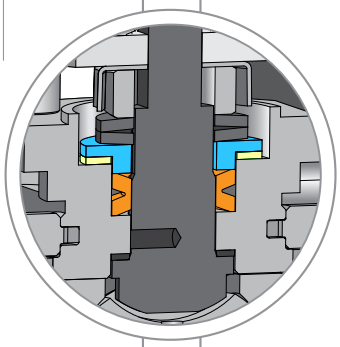

Zero fugitive-emission no maintenance stem sealing

- Patented HermetiX® stem sealing design with zero fugitive emission sealing capability.
- Tested or certified according to ISO 15848-1 and API641 standards.
- Up to 500,000 cycles of operation.
- Field proven for millions of cycles continuous operation.

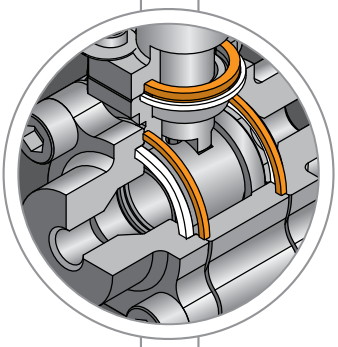

Double body sealing

- Body-to-ends & body-to-bonnet double sealing for superior sealing.
- Selection of sealing materials for diverse applications.
- Fugitive emission prevention.

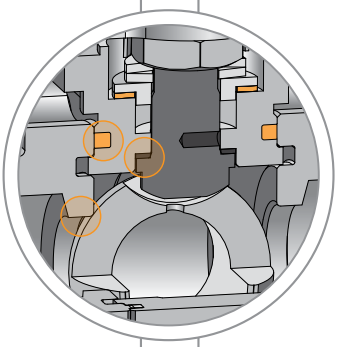

Fire-safe

- According to API 607 & ISO 10497 - where applicable.
- Type-tested and certified by leading certification bodies for marine service – for some valve series.
- Clean fire-safe construction guarantees no graphite contamination of the media flow.

Superior In-line sealing

A variety of implemented mechanisms provide extended in-line sealing capabilities such as:

- Bidirectional sealing
- High pressure full Δp sealing
- High & low pressure sealing
- Others

Quarter Turn Valves - Introduction

Quarter-Turn Ball Valves Design Styles

HABONIM offers ball valves in a variety of design styles and technologies that is most effectively supports a wide range of applications and use cases. We offer Floating ball style valves and Trunnion-mounted ball style valves with several construction methods.

Floating Ball Valves Design

The floating ball valve is the legacy style for ball valves, the most used and best fit for many industrial applications. The design places the valve ball between seats that holds it in place but without a firm connection to the valve body, hence, it "floats" inside the valve. Assuring a tight seal between the seats and the ball as well as the between the seats and the valve body guaranties the valve in-line sealing by a simple structure with minimal parts. As a rule of thumb, a floating ball valve should be considered as first choice wherever applicable.

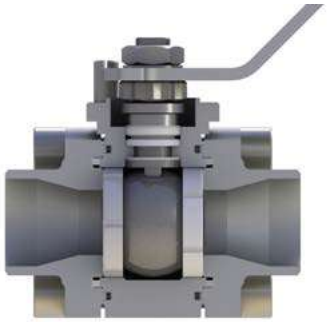

Trunnion-Mounted Ball Valves

In a trunnion-mounted valve, the ball rotates only around its vertical axis while being mechanically anchored to the top and bottom of the valve body. This construction balances the torques of the rotating ball and keeps it in a lower range than with similar sized floating ball valves by tolerating the heavy loads applied to the valve trim as a result of large sizes, high pressures and dynamic temperature cycles. The seats are compressed against the ball sphere by the force of the springs and by the line pressure, providing "double block" or "double isolation" capability to the valve. Trunnion-mounted ball valves are often used for larger sizes, higher pressure ratings and dynamic temperatures.

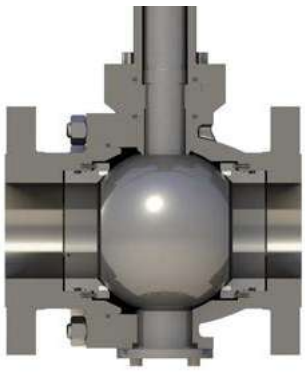

HABONIM BALL VALVES

Habonim Floating Ball Valve Designs

One-piece Design

The standard-port, one-piece, solid-cast body and flange design ensures minimum leak paths. The valve complies with ASME B16.5 for flange dimension and ASME B16.10 for Face-to-Face dimensions. The body includes an ISO 5211 integral mounting pad for easy automation. To facilitate easy assembly and maintenance, the valve is designed with one flange with a side entry that allows all inner parts to be positioned easily, and with a threaded plug that sets all parts under a precise preload with high repeatability. The result is optimum operating torque and bubble tight shut-off. It is possible to modify the ASME-standard flange connections by drilling the flanges to the EN1092 PN16 and PN40 standard. It is also possible to change one flange to a weld-end connection. A thermal jacket (steam jacket) over a one-piece design is the most efficient solution in applications where heating up the valve's outer surface (and the media inside) is mandatory to maintain media flow.

31 series | Vacuum 10^{-6} Tor; ASME B16.34 class 150 | Size ½"-8" (DN15-DN200)
32 series | Vacuum 10^{-6} Tor; ASME B16.34 class 300 | Size ½"-8" (DN15-DN200)

Two-piece Design

This unique full-port two-piece solid-cast body and flanged end design supports high flow capacity. The Habonim two-piece design is available in ASME B16.10 for Face-to-Face dimensions and ASME B16.5 class 150 and ASME class 300 flange dimensions and also in EN 1092 PN16 and PN40. The body includes an ISO 5211 integral mounting pad for easy automation. The valve is designed as a split construction which facilitates easy assembly and maintenance with standard tools. Tightening the end connector to the valve body via the body bolts preloads the complete ball-seat set, ensuring low operating valve torque, repeatability, and bubble tight shut off.

73 series | Vacuum 10^{-6} Tor; ASME B16.34 class 150 | Size ½"-8" (DN15-DN200)
74 series | Vacuum 10^{-6} Tor; ASME B16.34 class 300 | Size ½"-8" (DN15-DN200)
77 series | Vacuum 10^{-6} Tor; EN 1092 flanged PN16 | Size 3"-6" (DN80-DN150)
78 series | Vacuum 10^{-6} Tor; EN 1092 flanged PN40 | Size ½"-2½" (DN15-DN65)

Three-piece Design

The forged, cast, or rolled bar 3-piece design is comprised of a body (center section) and a variety of end connectors (thread, weld, flange) to facilitate a wide range of construction configurations. The swing-out design of the center section allows the end connector to remain a fixed part of the pipe work while the valve itself can be maintained by swinging out the center section only.

26 series | Full port, solid cast | Vacuum 10^{-6} Tor
| In full compliance with ASME B16.34 class 600 | Size 2"-8" (DN50-DN200)

27 series | Standard and full port, forged or rolled bar | Vacuum 10^{-6} Tor
| ASME B16.34 class 2500 (wall thickness) | Size ¼"-2" (DN8-DN50)
| ASME B16.34 class 1500 (wall thickness) | Size 2½"-8" (DN65-DN200)
| Hybrid seats technology as an option

28 series | Standard & full port, forged or rolled bar, robust design, with Hybrid seats technology | Vacuum 10^{-6} Tor
| ASME B16.34 class 2500 (wall thickness) | Size ¼"-8" (DN8-DN200)

47 series | Standard or full port design, forged, cast or rolled bar | Vacuum 10^{-6} Tor
| ASME B16.34 class 900 (wall thickness) | Size ¼"-2" (DN8-DN50)
| ASME B16.34 class 600 (wall thickness) | Size 2½" (DN65)
| ASME B16.34 class 400 (wall thickness) | Size 3"-6" (DN80-DN150)

48 series | ASME BPE Floating Ball 3 Piece | Tube-size design, forged, cast or rolled bar
| Vacuum 10^{-6} Tor
| ASME B16.34 class 300 | Size ½"-1½" (DN15- DN40)| ASME B16.34 class 300
| Size 2"-6" (DN50- DN150)

Three-piece Threaded-Body Design

The forged, cast, or rolled bar 3-piece threaded-body design is comprised of a body (center section) and a variety of end connectors (thread, Coned & Threaded) to facilitate a wide range of construction configurations. The no-bolts design of the valve is suitable for high and very-high pressures.

24 series | Standard and full port, Floating ball design, forged or rolled bar
| Vacuum 10^{-6} Tor | In full compliance with ASME B16.34 class 2,500
| Size ¼"-1½" (DN8-DN40)

25 series | Forged or rolled bar | Floating ball design | Vacuum 10^{-6} Tor
| In full compliance with ASME B16.34 for 550 bar (8,000psi)
| Size ¼"-1½" (DN8-DN40)

29 series | Forged or rolled bar | Floating ball design | Vacuum 10^{-6} Tor
| In full compliance with ASME B16.34 for 1,034bar (15,000psi)
| Size ¼"-1½" (DN8-DN40)

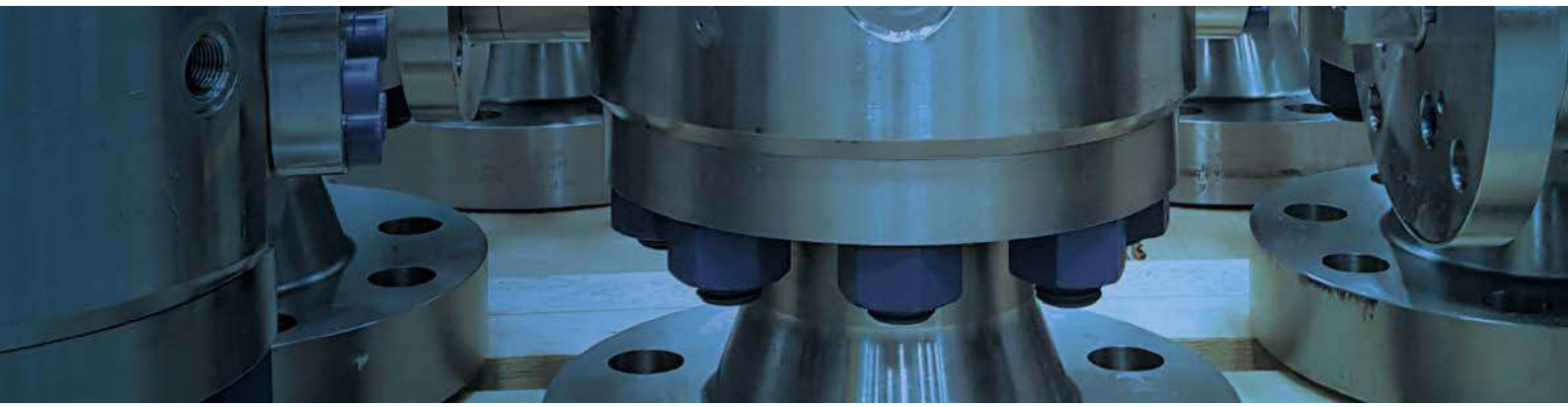

HABONIM BALL VALVES

Habonim Floating Ball Valve Designs

Multiport valves

Multiport valves are primarily used to simplify pipe and valve systems by replacing multiple two-way valves with a single multiport valve. They minimize dead legs, optimize drainability, simplify system validation and have a reduced envelope profile for easier installation. Multiport valves allow piping and machine engineers to design a simpler system that saves space and has fewer flow elements and leak paths. One multiport valve can replace multiple two-way valves and automation devices, and provides safe and easy changeover and flow shutoff, all within a confined space. Reducing the quantity of piping and fittings also means faster and more cost-effective construction. Available in a variety of flow patterns and directions and in both automatic and manual configurations, the design possibilities offered by the multiport valve are virtually unlimited.

61 series
| Multiport with three horizontal ports
| Standard or full port design, forged or cast
| Vacuum 10^{-6} Tor
| ASME B16.34 class 600 (wall thickness) | Size ¼"-1½" (DN8-DN40)
| ASME B16.34 class 300 | Size 2"-4" (DN50-DN100)

62 series
| Multiport with four horizontal ports
| Standard or full port design, forged or cast
| Vacuum 10^{-6} Tor
| ASME B16.34 class 600 (wall thickness) | Size ¼"-1½" (DN8-DN40)
| ASME B16.34 class 300 | Size 2"-4" (DN50-DN100)

Diverter valves

Diverter valves are primarily used to split or combine process flows, or to switch medium among different pieces of process equipment such as pumps, filters, or whole pipelines Diverter valves provide reliable high flow rates in the most severe operating conditions, including vacuum conditions. They can also handle highly viscous media without the need for constant back-flushing. The diverter valves are available with different ball designs to accommodate a wide range of flow patterns. These flexible flow combinations reduce the number of valves in a system, thereby saving costs and facilitating easier control. Because all of the diverter valves have the same body Face-to-Face dimensions, they can be used with all standard end connections.

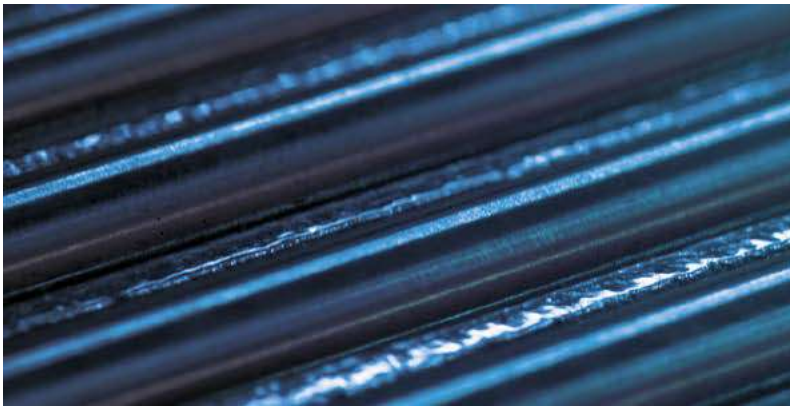

D31 series
| Bottom entry diverter
| Standard port design, cast | Vacuum 10^{-6} Tor
| ASME B16.34 class 150 (wall thickness) | Size ½"-8" (DN15-DN200)

S31 series
| Side entry diverter
| Standard port design, cast | Vacuum 10^{-6} Tor
| ASME B16.34 class 150 (wall thickness) | Size ½"-8" (DN15-DN200)

D32 series
| Bottom entry diverter
| Standard port design, cast | Vacuum 10^{-6} Tor
| ASME B16.34 class 300 (wall thickness) | Size ½"-8" (DN15-DN200)

S32 series
| Side entry diverter
| Standard port design, cast | Vacuum 10^{-6} Tor
| ASME B16.34 class 300 (wall thickness) | Size ½"-8" (DN15-DN200)

D47 series
| Bottom entry diverter
| Standard or full port design, forged or cast | Vacuum 10^{-6} Tor
| ASME B16.34 class 600 (wall thickness) | Size ¼"-2½" (DN8-DN65)
| ASME B16.34 class 300 (wall thickness) | Size 3"-6" (DN80-DN150)

S47 series
| Side entry diverter
| Standard or full port design, forged or cast | Vacuum 10^{-6} Tor
| ASME B16.34 class 600 (wall thickness) | Size ½"-2½" (DN15-DN65)
| ASME B16.34 class 300 (wall thickness) | Size 3"-6" (DN80-DN150)

D61 series
| Multiport with three horizontal ports
| Additional bottom port available
| Standard or full port design, forged or cast
| Vacuum 10^{-6} Tor
| ASME B16.34 class 600 (wall thickness) | Size -1" (DN8-DN40)
| ASME B16.34 class 300 | Size 2"-4" (DN50-DN100)

D62 series
| Multiport with four horizontal ports
| Additional bottom port available
| Standard or full port design, forged or cast
| Vacuum 10^{-6} Tor
| ASME B16.34 class 600 (wall thickness) | Size -1" (DN8-DN40)
| ASME B16.34 class 300 | Size 2"-4" (DN50-DN100)

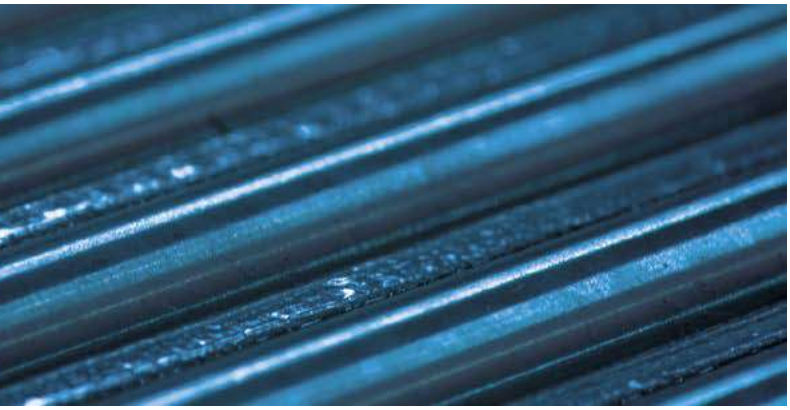

HABONIM BALL VALVES

Habonim Trunnion-Mounted Ball Valve Designs

Features:

- Specially designed to endure the harsh conditions of the oil & gas, petrochemical and other demanding applications
- Underground, above ground, offshore and onshore installation
- Full differential pressure (Δp) per the valve pressure rating
- Manually applies a maximum operating force of 360N (80 lbf)
- Double block & bleed single valve capability
- Seats preloaded by helical springs
- Antistatic grounding between ball, stem & body as standard
- Bi-directional flow
- Double Piston Effect (DPE) and Single Piston Effect (SPE) designs are both available
- Optional additions for 8" valve size and above:
  - Injection fittings for emergency stem or seat sealant & lubrication maintenance
  - Equipped with lifting lugs
  - Manually operated via gearbox
- Buttweld end valves may be supplied with extended spool pieces (PUPS) to avoid any risk of seat and seal damage during welding and post weld heat treatment operations

External finishing:

- Austenitic stainless steel valves are delivered in their natural finish
- Carbon steel valves are sandblasted and externally coated with paint
- Other painting systems are available upon request

One-Piece Design

52 series | Cryogenic Top Entry Trunnion Mounted
| Size 1½"-6" (DN40-DN150) | Class 300

Two-Piece Design

The 2-piece cast trunnion-mounted ball valve designs are cost effectively support pressure ratings up to ASME Class 600, serving as the first choice where applicable with ANSI flange ends.

81 series | Full Port | Vacuum 10^{-6} Tor
| ASME B16.34 class 150 (wall thickness) | Size 2"-16" (DN50-DN400)

82 series | Full Port | Vacuum 10^{-6} Tor
| ASME B16.34 class 300 (wall thickness) | Size 2"-16" (DN50-DN400)

83 series | Full Port | Vacuum 10^{-6} Tor
| ASME B16.34 class 600 (wall thickness) | Size 2"-16" (DN50-DN400)

Three-Piece Design

The 3-piece forged body and end design is a robust heavy-duty design for pressure ratings up to ASME Class 2500 With ANSI flange, DIN flange or weald ends.

91 series | Full & Standard Port | Vacuum 10^{-6} Tor
| ASME B16.34 class 150 (wall thickness) | Size 2"-16" (DN50-DN400)

92 series | Full & Standard Port | Vacuum 10^{-6} Tor
| ASME B16.34 class 300 (wall thickness) | Size 2"-16" (DN50-DN400)

93 series | Full & Standard Port | Vacuum 10^{-6} Tor
| ASME B16.34 class 600 (wall thickness) | Size 2"-16" (DN50-DN400)

94 series | Full & Standard Port | Vacuum 10^{-6} Tor
| ASME B16.34 class 900 (wall thickness) | Size 2"-16" (DN50-DN400)

95 series | Full & Standard Port | Vacuum 10^{-6} Tor
| ASME B16.34 class 1500 (wall thickness) | Size 2"-12" (DN50-DN300)

96 series | Full & Standard Port | Vacuum 10^{-6} Tor0
| ASME B16.34 class 2500 (wall thickness) | Size 2"-12" (DN50-DN300)

Three-Piece Threaded Body Design

99 series | forged or rollrd bar | Trunnion ball design | Vacuum 10^{-6} Tor
| In full compliance with ASME B16.34 for 1,034 bar (15,000psi)
| Size ¼"-1" (DN8-DN25)

VALVE FEATURES

Fire Safe Design

Valves to be used in explosive or fire-hazard areas need to be (according to some standards and regulations) be designed to prevent in-line leaks for at least 30 minutes when exposed to flames and/or temperatures between 900 - 1000°C. In addition, after cooling down, a fire-safe valve has to be able to be cycled once and seal at an acceptable level of in-line leakage.

Habonim fire-safe valves include body seals fabricated from graphite, which is well-known as a fire-retardant material. In the event of fire, the valve's soft seats melt and the ball is pressed against a metallic fire lip on the downstream end connector thus preventing in-line leakage. The fire also burns off the stem's thrust seal, causing the stem, which has a machined chamfer at its root, to be pushed up and form a metal-to-metal seal with the valve body and prevent leakage. For stem sealing Habonim is using the patented HermetiX seal, a unique polymer-based graphite-free stem seal that, even after its polymer materials have melted, allows the stem to stay aligned and fully operable after cool-down. During normal operation, our polymer-based stem seal allows 500,000 operation cycles without maintenance, making it remarkably more durable than porous graphite seals, which have to undergo maintenance every 5,000 cycles without refurbishment. This design has been tested and certified to API 607 and ISO 10497 standards.

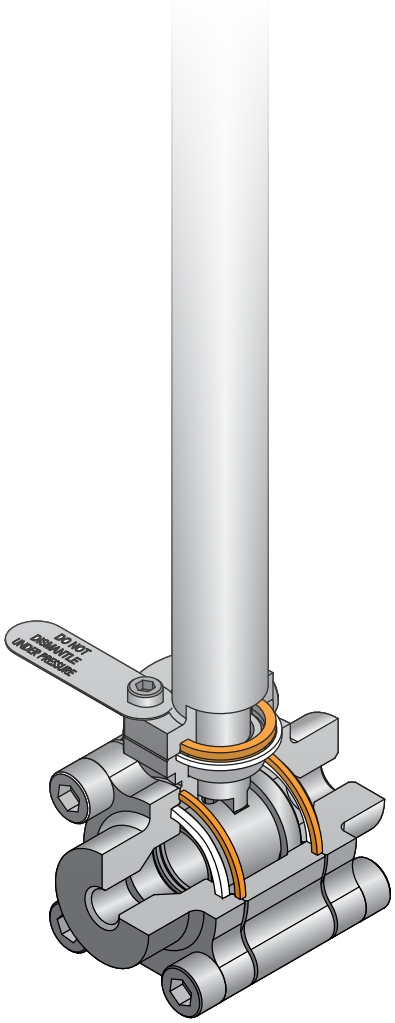

Tongue & Groove Body Seal Design

A 'tongue' machined on one side of the valve body and a matching 'groove' machined on the opposite side provides a perfect interlock system that precisely aligns the body and ends along the valve's center axis, thus increasing accuracy and repeatability during valve assembly and maintenance. The tongue & groove design is used most of our fire valves so that the expanded body seal is fully encapsulated and compressed in the event of a fire. The tongue & groove design forces fluid emissions to flow in a labyrinth pattern, thus ensuring zero leakage into the atmosphere.

Body Bolts

Instead of long through-way bolts and nuts, all of our 3-piece fire-safe valves use double the number of one-size-up short bolts threaded into the body. In the event of fire these bolts minimize thermal expansion and prevent external leakage.

Ball Configurations

Our mirror-polished solid balls ensure tight shutoff and long service life. All balls come with specially rounded leading edges to eliminate excessive seat wear during rotation. Our balls technology can supports change to variety of metals (some are available only upon request) such as Stainless Steel 316 (CF8M), Alloy-C276, Alloy-C22, Monel 400, 254SMO, Duplex, Super Duplex, Inconel 625, Titanium and more. Ball materials other than Stainless Steel 316 (CF8M), are marked for clear identification.

There are different styles related to the ball port itself:

- Standard port ball (also known as reduced port) - The flow through the ball is one size smaller than the pipe's size resulting in a flow area smaller than the pipe's area. The reduced flow area increases the flow velocity (assuming a constant flow discharge) and the head-loss over the valve.
- Full port ball - Has an over-sized ball so that the ball's port is the same as the pipe's inner diameter, thus reducing friction loss. Flow is unrestricted but the valve is larger so full-port balls are typically used where free flow is particularly important such as in pipelines that require pigging.
- Tube size ball (also known as true port) has a port which is identical to the tube's inside diameter. This configuration is used mainly in the pharmaceutical industry where dead legs and pockets of contamination are unacceptable.

Pressure Equalizing Hole

Balls typically have a hole in the stem slot to equalize the pressure over the ball sphere. The pressure inside the ball port and the pressure in the valve cavity are identical and hence no stress is applied to the ball sphere. The pressure equalizing hole is eliminated in the following cases:

- High surface finish requirements, mechanically polished or electro-polished
- Diverter valves
- Valves with cavity filler seats
- Double block and bleed valves
- Pharmaceutical or other applications with very high sanitary requirements

Minimum stress on the ball by adding a pressure equalizing hole

VALVE FEATURES

Ball Configurations

Cavity Pressure Relief

This safety feature is for valve applications where a trapped cavity must be avoided a 3 mm hole is included in the upstream ball sphere so that any pressure that builds up in the valve cavity will be released into the upstream pipeline. The use of a cavity pressure relief hole feature is mandatory when using ammonia, chlorine or any other liquid media that is at risk of transforming into a gas and thus elevating the pressure within the valve cavity in an uncontrolled manner. A valve which includes the 'P250' code will always be unidirectional, and will include an arrow flow plate attached to the valve body. Improper installation in the opposite direction will cause an in-line leak.

3 mm relief hole face the upstream

'C' Ball

Habonim offers a two-way ball with its upstream sphere completely machined through the ball port and thus has a C shape. This feature is mainly used where media tends to crystalize on the upstream ball sphere such as, for example, molten sugar or baked ground coffee. When a standard valve is in the closed position and a solid layer has adhered to the ball's upstream sphere, subsequent valve operation will erode the upstream soft seat, loosen the pre-load of the ball seats set, and rapidly degrade the valve's functionality. With a 'C' ball media solidification is impossible as there is no surface area on which the media can accumulate. The upstream seat withstands the media unscratched; the pre-load of the ball seat set as well as the functionality of the valve remain intact for a longer period of time.

Upstream sphere completely machined in a 'C' ball

Multiport and Diverter Ball

Multiport and diverter ball designs are used primarily to split or combine process flows or to switch medium between alternative pieces of process equipment. The diverter ball configuration can be either bottom entry or side entry. The diverter ball has the same sphere diameter as standard 2-way balls so the same soft parts can be used. Multiport balls have numerous flow configurations, which are described in detail in the Multiport chapter of this catalog. The multiport ball has a larger sphere diameter than a diverter ball, allowing a firm grip of four seats vs. two seats in the diverter configuration.

Diverter ball with isometric T port construction

V-Ball

The V ball is used in control valve solution for less demanding applications, such as clear liquid at a maximum pressure drop of 6 bar (87 psi), or clean gas at a maximum pressure drop of 10 bar (145 psi), and maximum temperatures of 120-°C (248-°F) for both. The V ball design is comprised of a floating characterized ball, mounted between two seats, which maintain a trim preload and bubble-tight shut-off and low torque demand. V-Balls come in a variety of 'V' and 'slot' shapes, and can be custom designed to meet any control requirement. The V-Ball is available in a wide range of high-alloy materials and coatings for highly corrosive applications.

Characterized ball for flow control applications

Downstream Pressure Relief Ball

Habonim ball downstream pressure relief is designed with a diagonal hole in the downstream sphere toward the bottom of the ball. In the open position the flow runs smoothly through the valve. When the valve is closed the downstream pressure is vented through the diagonal tunnel and out via a third port incorporated into the valve body so that the relieved pressure can be diverted safely to a secured area. This feature is mainly used for pressure gauges and instrumentation service. This design eliminates the need to install an additional downstream pressure vent valve.

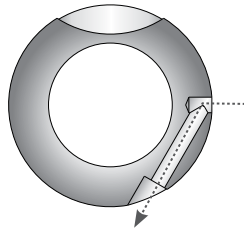

Special diagonal tunnel vents downstream pressure when the valve is closed.

CIP/SIP

Habonim 'CIP' ball code is mainly used in sanitary and biopharm applications. in clean applications the main ball valve problem is contamination caused by impurities trapped in the cavity between the ball's outer sphere and the valve body's inside diameter. To overcome this problem Habonim has designed a special ball that allows the stream to clean the valve cavity thoroughly during the CIP/SIP process, with the valve in the full open position. The bottom line: Bidirectional and streamlined flow with a high Cv, and self-cleaning of hidden cavities.

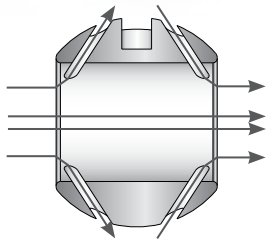

With the valve in the open position, special tunnels flush the valve cavity constantly

VALVE FEATURES

Seat Configurations

Standard Seat

A flexible, precision-machined seat that provides the highest seal capabilities (EN12567 Rate A) in high pressure and vacuum conditions. Its unique design reduces valve torque, facilitating a more compact, lower-weight automated package. The design also reduces wear, thus extending the life of the seat. The seat perimeter has pressure-equalizing slots to allow pressure to penetrate into the body cavity for better sealing and for avoiding upstream seat collapse into the valve cavity while turning the valve ball from the open to closed position under high differential pressure.

Standard seat

Self-Relieving-Seat (SRS)

The Self Relieving Seat (SRS) is used mainly in syltherm and dowtherm services in the chemical and biopharm industries. Both syltherm and dowtherm have a high thermal expansion coefficient and in trapped cavities (such as when the valve ball is in its closed position) even a moderate temperature increase will cause dramatic pressure build-up that can cause cessation of valve operation, seat swelling, and even valve shell failure. The SRS is designed to flex and allow the trapped pressure to escape into the pipeline, while shutting off as soon as the peak pressure is relieved. The pressure relief is achieved by a special internal groove that is machined into the seat radii facing the ball. Additional radial grooves enable the pressure to bypass the ball and access the internal groove. The seat sealing surface is in the central internal section and provides tight shutoff. The outer section of the seat above the internal groove gives the support needed to the ball when higher line pressure pushes the ball toward the downstream seat, thus preventing "crushing" of the seat. SRS seats can be used with a differential pressure up to ASME Class #300.

Self-Relieving-Seat (SRS)

Seat-seal

In some use cases valve must seal the pressure at the upstream side, which contradicts the traditional floating ball mode of operation (where sealing is typically done on the downstream seat only). Habonim's solid one-piece seat-seal design blocks the flow through the back of the seat, generating an upstream seal. Seat-seal can be used with differential pressure up to ASME Class300. For higher differential pressures use either a valve with hybrid seats, or a dual floating ball valve integrated into a one block or trunnion mounted valve.

Seat-seal

Hybrid Seat

When a soft seated floating ball valve is held even momentarily at mid position, the upstream seat is only partially supported by the ball and can be pushed towards the valve cavity by the force of the stream. This deformation is amplified with increased media density, high differential pressure and/or high velocity. Under these extreme conditions the deformation can: cause the ball to grip the unsupported area of the soft seat and jam the valve; slice the seat by the port edge of the ball; or trigger stem twisting (caused by excessive torque applied by the operator trying to close the valve). Habonim's line of Hybrid seats were developed especially to overcome the problems posed by high differential pressure applications. The combination of a metallic housing and polymer insert offers the stiffness of a metal seat with the bubble tight shutoff leakage rate and operating torque of a soft seat. Different hybrid seat designs were developed to meet the needs of different applications, and are designated by the metallic housing design.

Hybrid seat

Seat Configurations

Cavity filler seat

The cavity filler seat design minimizes crevices and gaps between the ball and the valve body, thus reducing the risk of trapped contaminants. Because the valve body is specially machined with a larger bore diameter to fit the special cavity filler seat dimensions, they cannot be retrofit into a standard valve body. The cavity filler seat is a one piece seat-seal design and is therefore suitable for use with the Habonim 3-piece product line.

Note: A valve with a cavity filler seat cannot be used in fire-safe service.

Cavity filler seat

Metal seat

Habonim metal seats are used for extreme service applications where high temperature, abrasion and/or corrosion restrict the use of soft seats. The metal seats are mate lapped with the ball for enhanced engagement and sealing. A variety of surface treatments and coatings can be applied to the seat's outer surface to withstand corrosion, galling and other forms of wear.

Metal seat

V-port seat

Superior control performance and accuracy is designed into the geometry of the downstream V-port. The precision wire cut 'V' shape of a metal seat, enables equal percentage flow characteristics, while S-port design ('Slot') provides linear flow characteristics. V-Port valve assembly, comprised of a ball and wire cut metal seat, lapped together into a single seamless component. V-port design provides the high rangeability and precision throttling required for clean or dirty liquids and gases, as well as fibrous suspension applications. The streamlined flow passage allows for high recovery, maximum efficiency and excellent erosion resistance.

V-port seat

VALVE FEATURES

Stem Design

A crucial component in a quarter-turn ball valve is the stem, which transfers the torque from the operator to rotate the ball and control its movement. The stem geometry and surface finish is crucial to minimize stem leak and maximize ease of operation. The stem is a dynamic element and, in most cases, is the only element that protrudes from the pressure vessel and is thus subject to safety issues as well. Habonim's robust stem design complies with ASME B16.34 and API 6D and can endure at least twice the valve's nominal torque. To solve a major safety issue, the stem is designed to be "blowout-proof". Because it is inserted into the valve body from within, the stem will not release under pressure. All Habonim stems are, by default, fire-safe design. A special chamfer is machined at the root of the stem so that, in the event of fire, the stem is pushed upwards and seals against the valve body - metal to metal engagement. Various stem materials are available, from austenitic stainless steel to nickel alloys, to titanium for light and moderate torque requirements, and for high cycle applications or high torque demands. The stem top planes for valve sizes ½" (DN15) up to 2½" (DN65) are typically a Double-D shape, while 3" (DN80) stems and above typically have a square shaft (although a Double-D stem can be provided upon request by adding the 'WR' suffix to the valve description).

Anti-Static Design

An anti-static device provides for electrical continuity between the body, ball and shaft of the valve and is used to discharge static electricity buildup on electrically isolated balls. According to the EN ISO 17292 standard, all valves with a size up to 2" (DN ≤ 50) require a stem/body contact, while larger valve sizes also require a ball/stem contact. The anti-static feature shall have electrical continuity across the discharge path with a resistance not exceeding 10 Ω from a power source not exceeding 12 VDC when type tested on a new, dry, as-built valve after pressure testing and cycling of the valve at least five times. The Habonim anti-static device, in which contact is made via a spring loaded stainless steel element, complies with EN ISO 17292 and is, in fact, built-in to all Habonim valve product lines, without exception.

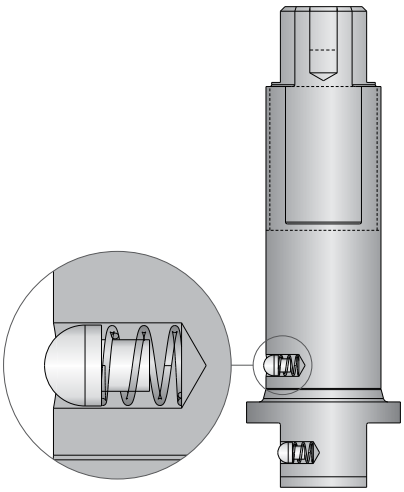

Anti-static design

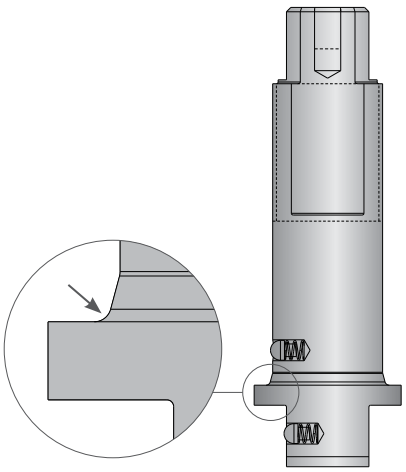

Stem design

Stem Seals

The valve trim - and the valve stem seal design in particular - determine the quality of a valve. The stem seal must perform two tasks: keep the media within the boundaries of the pressure vessel, and allow uninterrupted leak-free continuous open/closed quarter-turn rotation.

Unlike the valve body's static seal, the stem seal is subject to dynamic operation of the valve, as well as to side loads resulting from actuator misalignment or from the operator forcing the handle incorrectly. The valve trim typically comprises two Belleville springs assembled Face-to-Face, which preload the stem seal. This self- adjusting mechanism compensates for wear and pressure/temperature differentials - ensuring a leak-tight seal and extended service life. Habonim's trim design for heavy-duty service, such as high cycle applications, uses four or even six sets of Belleville springs so as to maintain preload over a longer operational cycle life. The Belleville springs are compressed by the stem nut, which is locked to prevent unintentional release during cycles.

Habonim's stem seal design, consisting of a live-loaded thrust bearing and anti-abrasion ring combined with a stem seal, significantly increases valve cycle life over conventional ball valves and extends the time between adjustments.

VALVE FEATURES

Stem Seals

Graphite-free fire safe HermetiX® stem seal

The patented HermetiX® stem seal is named for its distinctive "X"-shaped design. The flexible "X" shape creates a dynamic sealing arrangement so that, in the event of pressure buildup or side load, the HermetiX® adjusts dynamically to prevent fugitive emissions. The result is a superior stem seal design compared with the conventional flat stem seals currently available on the market.

The HermetiX® Fire-safe. This patented design includes a polymer based stem seal and a unique fire safe certified construction. The graphite-free stem seal, suitable for use in hazardous industries such as chemical, petrochemical, oil & gas, Food & Beverages is designed to operate for 500,000 cycles without refurbishment. The HermetiX® fire safe valve offers the ultimate solution - an exclusive graphite free stem seal that eliminates the risk of graphite disintegration after prolonged valve cycles, protecting both line materials and air quality. The HermetiX® fire safe valve meets the requirements of fire-safe API 607 / ISO 10497 standards, as well as the stringent ISO 15848-1 standard.

Features

- Prevents media contamination from graphite particles
- FDA, CE1935:2004 approved polymer or other materials is available upon request
- Fugitive emission certified to ISO 15848-1 and API 641
- Habonim patented design
- Designed to operate for 500,000 cycles without refurbishment
- Prevents media contamination from graphite particles
- Ensures uninterrupted production
- Increases site safety
- Anti-static as standard

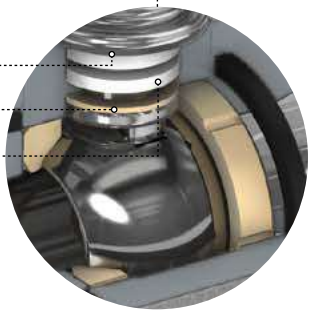

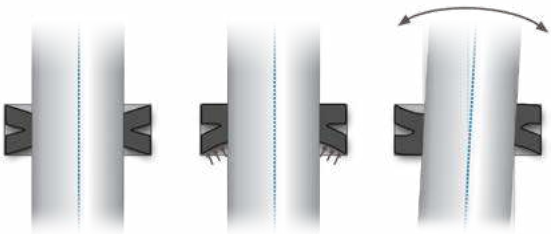

No pressure Pressure build-up Side load

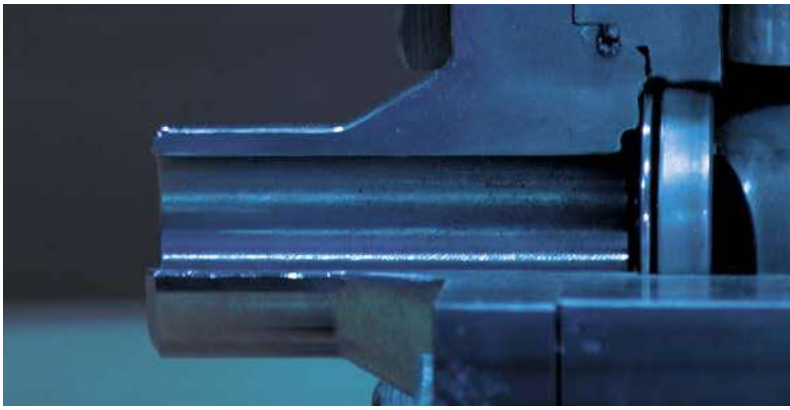

High Cycle (HC) Stem seal

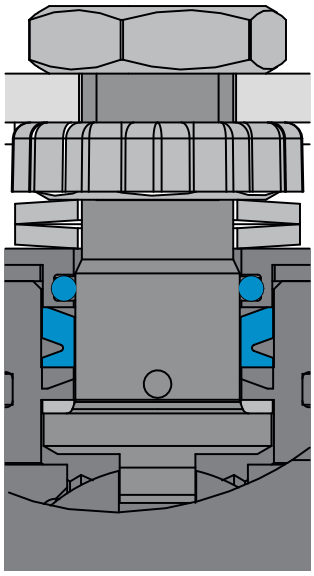

High cycle service is defined by Habonim engineering as continuous operation for more than one hour at a frequency greater than 1 cycle / 180 seconds.

When designing a valve for high cycle service parameters, such as heat dissipation due to friction of metallic and plastic parts, resistance to fatigue stress, and mean time between maintenance activities must be taken into consideration.

For high cycle applications Habonim recommends the use of valve stems made of high tensile material. The stem will be polished for a high degree of surface roughness. The stem thrust seal will always be made from highly wear-resistant plastic material. A Viton O-ring is inserted into a customized follower. The complete trim assembly is preloaded by a double or even triple Belleville spring stack. All of these design features give the valve a particularly long service life.

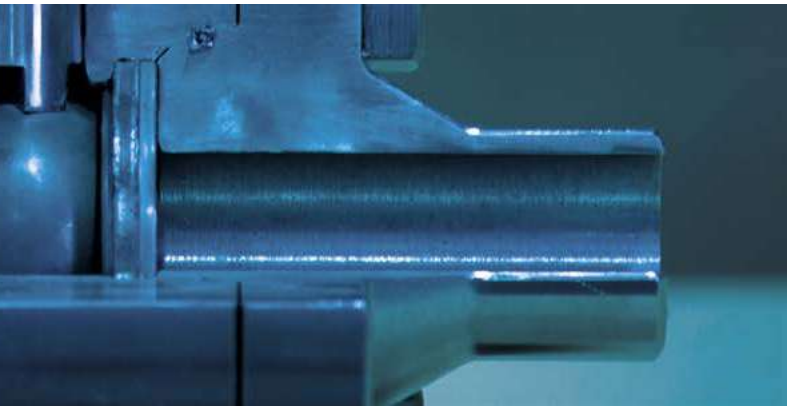

VALVE FEATURES

End Connections

Habonim offers a variety of end connections for its 3-piece valves, supporting the industry standard connections for piping in diverse applications and geographies.

TC/TCI/TCD

Tri-Clamp end - designed to ASME BPE (TC) standard, allows fast connection or removal of the valve from the line. Mainly used in the pharmaceutical and food & beverage industries.

BW

Buttweld end for various pipe schedule - designed to ASME B16.25, EN12627-4, BW code stands for buttweld schedule 40, for different pipe schedule BW should be followed by the relevant schedule number (5,10,80,160)

SW

Socket-weld end one piece solid cast designed to ASME B16.11 and EN 12760. Leaving a 1 mm gap (average) between the pipe end and the socket inner plan is a common welding practice to avoid internal stress due to thermal expansion during the welding process

XBW

Extended buttweld end for various pipe schedule - one piece solid cast - special design for in-line welding save labor cost and keep the integrity of the product factory tested.

XSW

Extended Socket-weld end one piece solid cast - special design for in-line welding save labor cost and keep the integrity of the product 'factory tested'

BWO / BWI / BWD

Buttweld end for various tube standards - designed to ASME BPE (BWO), ISO 1127 (BWI) and DIN 11850 (BWD). The length of this end doesn't allow the use of orbital welding.

Standard	Sizes	Wall thickness (mm)	End Connection (19-22)	End Connection Length
ISO 1127	⅜"-¾"	1.6	BWI1.6	Short
			ETI1.6	Extended
	1"-2½"	2.0	BWI2.0	Short
			ETI2.0	Extended
	Over 2½"	2.3	BWI2.3	Short
			ETI2.3	Extended

ETO / ETI / ETD

Extended buttweld end for various tube standards - designed to ASME BPE (ETO), ISO 1127 (ETI) and DIN 11850 (ETD). One piece solid cast with sufficient length to allow the use of orbital welding.
Habonim ETD end connections are designed in accordance to EN10357 – Series A.
Habonim ETI end connections are designed in accordance to EN10357 – Series C.
Dimensions of the end-connections tube ends are suitable to be welded on tubes that meet this standard.
For other tube sized ends please contact a Habonim representative.

CTM

Coned and Threaded type female connection to be used with Coned & Threaded medium-pressure tubing and connection components.
Female connection geometry and sizes per the Below.

Size	Dimensions - mm (inches)					
	A	B	C	D	F	H
02	9.9(25/64)	7/16-20	7.1(.28)	12.7(.28)	4.8(.19)	2.8(.109)
03	13.1(33/64)	9/16-18	9.6(.38)	9.6(.38)	7.9(.31)	5.2(.203)
06	19.1(3/4)	13/16-16	11.1(.44)	11.1(.44)	12.7(.50)	9.1(.359)
07	32.9(1.19/64)	3/4-14	12.7(.50)	12.7(.50)	16 (.63)	11.1(.438)
10	45.47(1.79)	1 3/8-12	20.6(.81)	20.6(.81)	22.4(.88)	14.3(.562)

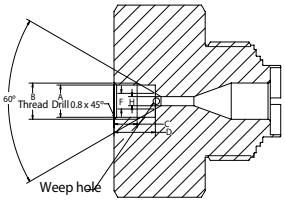

Flanged			
150	ASME B16.5 #150 RF	PN16	EN1092 PN16 RF
300	ASME B16.5 #300 RF	PN40	EN1092 PN40 RF
600	ASME B16.5 #600 RF	PN63	EN1092 PN63 RF
900	ASME B16.5 #900 RF	PN100	EN1092 PN100 RF
		PN160	EN1092 PN160 RF

150/300/600/900 | PN16/40/63/100/160

Raised Face flange ends designed to ASME B16.5 or EN1092 for a variety of pressure classes.
Valve Face To Face sizes are per Habonim catalog data only.

NPT / BSPT / DIN2999 / DIN3852

Female thread end designed to ASME B1.20.1 NPT
EN 10226-1 BSPT/DIN2999/DIN3852 and more

MNPT / MBSPT

Male thread end designed to ASME B1.20.1 NPT
EN 10226-1 BSPT/DIN2999/DIN3852 and more

LL / LM

Compression ends for metric (code LM followed by the tube OD in mm) or imperial (code LL) tube dimensions. mainly used in instrumentation services, with sizes up to 1" (DN25)

Grayloc©

Grayloc© compatible hub designed to fit an opposite hub for an easy low or high pressure connection Using a self-energized seal (Grayloc© is a registered trademark of Grayloc Products, L.L.C.)

VALVE FEATURES

Handles

A valve handle is the interface between the operator's hand and the valve trim. Habonim's handles are designed for safe operation, with a firm and comfortable grip. To facilitate ease of operation, the handle length ensures that the maximum force required at the handle-end to apply the breakaway torque will never exceed 360 N (80 lbf). The handles are manufactured in a variety of technologies: casting, forging, punching, and laser cut and welding. The standard materials are zinc plated carbon steel and stainless steel. Habonim's range of handle designs addresses the diverse needs of multiple applications.

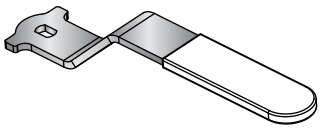

The 'SHARK' handle

Habonim's standard handle for valves with an ISO 5211 top pad.

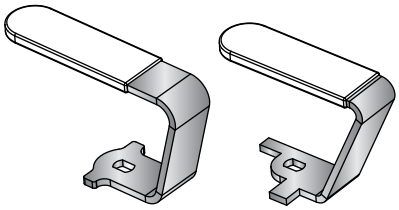

The 'SCORPION' handle

Habonim's special handle for confined spaces. There are two types to accommodate valves with or without an ISO 5211 top pad. To specify a valve with the SCORPION handle add the '-SCRP' suffix to the valve code.

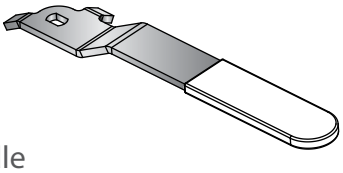

The 'POINTER' handle

Habonim's standard handle for valves without an ISO5211 top pad.

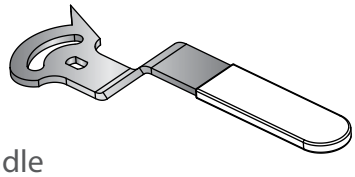

The 'ADJUSTABLE' handle

Habonim's special handle for manually controlled valves. It is supplied as part of a kit that includes a lock-in-place mechanism and a mirror-polished scale for clear identification of the valve's angular position. To specify a valve with the ADJUSTABLE handle add the '-ADJ' suffix to the valve code.

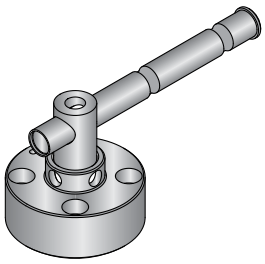

The T-Handle (TH)

Habonim's special handle designed for trailers with its compact footprint and lockable option. Available in the following Habonim high-pressure TPED certified series: 24, H24, H25 and H29.
The rod can be moved from side to side to increase leverage for a better user interface experience.
To specify a valve with the T-Handle, add the '-TH' suffix to the valve code.

The Oval handle (OVL)

Habonim's special handle designed to avoid unintentional movement of the valve handle. It is also used in confined spaces where the handle must not protrude beyond the valve's Face-to-Face plate. To specify a valve with the OVAL handle add the '-OVL' suffix to the valve code.

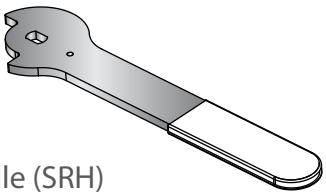

The Spring Return Handle (SRH)

An extra thick handle design to withstand the severe impact during valve closing. This handle is part of the SRH unit.

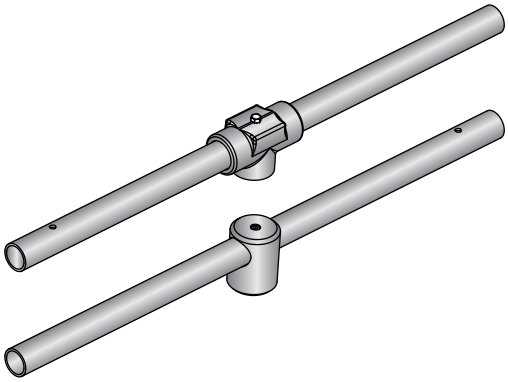

Habonim's standard handle for large valves (2½" and above)

Habonim's standard handle for large (2½" and above) cryogenic, high pressure and metal-seated valves, and for large (3" and above) standard valves. It provides a firm grip and smooth operation. The maximum force required at the handle-end to apply the breakaway torque shall not exceed 360 N (80 lbf). Habonim supplies valves with 2½" standard port and above for manual operation with handles attached to or packed with the valve. (with the exemption of 47 series which is for 3" standard port and above). If the valve is to be automatically actuated, Habonim removes the handle and prepares the valve stem seal accordingly. To specify a valve prepared for automated actuation, add the '-BS' (bare shaft) suffix to the valve code. The '-BS' suffix does not apply to valves size up to and including 2.

CONTROL VALVES

General 38
Sizer Software (HVS) 50
Floating Ball
3 Piece 53
Flanged 61

CONTROL VALVES

General

Habonim's Control product line valves are subject to the general Habonim valves design, materials, practices, methodologies and certifications – for more information, see Valves General chapter.

Habonim Control valves are equipped (in some series) with the Total HermetiX integrity package for superior sealing, safety and environmental care.

Control Valve

Habonim control valves are designed for accurate, flexible, simple maintained and cost-effective flow control systems for the harshest environments. these offer a compact, lightweight, long-life solution with: step-less characterized pressure and flow control for fast response times, wide rangeability, and bubble-tight shutoff. Critical performance features include: high pressure drop capacity with straight-through flow, high Cv, and large exhaust capacity. Other design features ensure ease of maintenance and zero backlash.

Features

Design

- V-Ball or V-Port designs in multiple shapes.
- V-port with metal-Seat to ball down stream sealing.

Materials

- Variety of surface treatments for durable operation.

Reference standards

- Testing & acceptance criteria ANSI/FCI 70-2.

Availability

Control features can be added to most of Habonim valves series.

This chapter describe the Industrial valves control series,yet similar capabilities can be added to some of the Cryogenic, High Pressure, High Temperature (metal seated) valves.

Quick Selection Table

Total HermetiX® | **Port:** Standard Port Full Port Tube Size | **End Connections:** Threaded Flanged Welded

Ordering Code

	Ball Valve	Design Type	OC	Series	TH	Port	End Con.
Temperature: -60°C - +260°C (-76 °F ÷ +500 °F)	Floating Ball	3 Piece	OC	N47	TH	Standard Port, Full Port	Threaded, Flanged, Welded
		1 Piece	OC	N31	TH	Standard Port	Flanged
			OC	N32	TH	Standard Port, Full Port	Flanged
		1 Piece 2 Piece	OC	N73	TH	Full Port	Flanged
			OC	N74	TH	Full Port	Flanged
			OC	N77	TH	Full Port	Flanged
			OC	N78	TH	Full Port	Flanged

Valve Size (Inches): ¼ ⅜ ½ ¾ 1 1¼ 1½ 2 2½ 3 4 6 8 10 12 14 16

900									400							
	150															
	300															
	150															
	300															
										PN16						
	PN40															

ASME Class			150	300	600	900	1500	2500	6000
Pressure Bar	0	16	20	50	100	150	250	414	1034
Pressure psi	0	230	290	725	1450	2175	3600	6000	15000

Note: Control features can be added to most of Habonim valves series - see Ordering Codes.

Design features

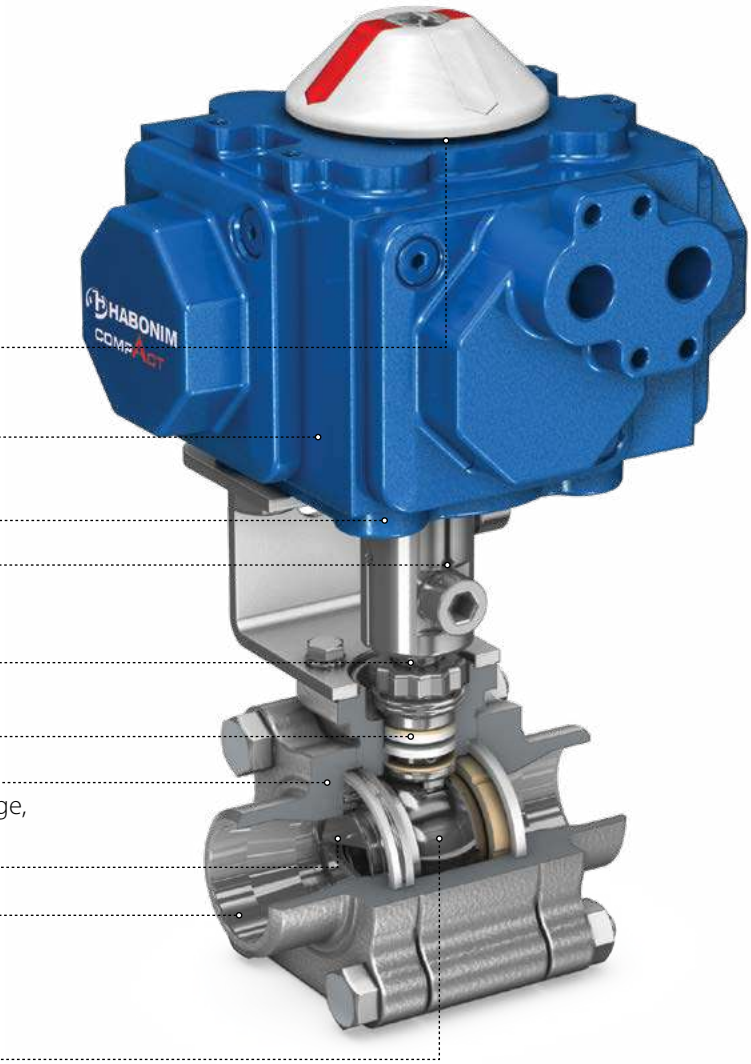

Zero hysteresis 4-piston actuator

Calibrated and tested complete control package

Light weight, compact control unit with exceptional hydraulic performance

Zero backlash adaptor

Tight tolerance trim

HermetiX™ stem seal certified to ISO 15848-1

Unique LTPN surface treatment of ball/seat set

Wide range of ball/seat set geometries for equal percentage, linear characteristics and modified flow solutions

Streamlined flow passage

Lapped ball/seat set perfect matching

CONTROL VALVES

V-Port & V-Ball Valves

V-Port and V-Ball valves offer a viable alternative to other valve types including globe valves, which tend to be large, expensive and cannot always guarantee bubble-tight shut-off.

Habonim's V-design provides the high rangeability and precision throttling required for clean or dirty liquids and gases, as well as fibrous suspension applications. The streamlined flow passage allows for high recovery, maximum efficiency and excellent erosion resistance. Balls come in a variety of slot shapes and can be custom designed to meet any control requirement.

Superior control performance and accuracy is designed into the geometry of the downstream V-port. The precision laser cut 'V' shape enables equal percentage flow characteristics, while the 'slot' design provides linear flow characteristics downstream.

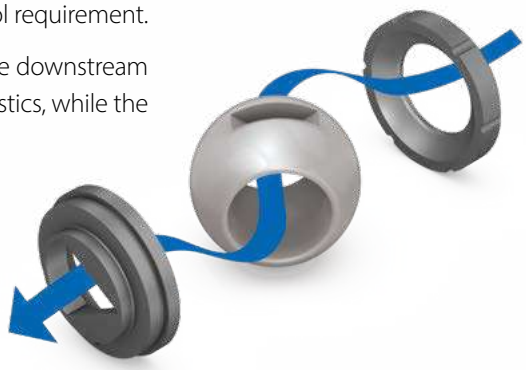

V-Port

Extremely high performance is achieved with Habonim's V-Port valve assembly, comprised of a ball and laser cut metal seat, lapped together into a single seamless component. Both the ball and metal seat are surface treated and hard coated (LTPN-standard) to resist abrasion and galling. A nitride coating is applied as standard by a thermo-chemical diffusion process that transforms the outer base-metal layer of the ball and seat to a hard matrix. A standard profile seat located upstream maintains the preload of the floating ball and metal seat downstream. The end result is a superior control valve, with bubble-tight factory-tested shut-off, exceeding ANSI FCI 70-2 class VI. The V-Port design is applicable for rugged environments such as steam control with a maximum pressure drop of 20 bar (290 psi), high differential pressure maximum pressure drop of 35 bar (507 psi), and abrasive media. If control characteristics need to be modified, then changes are also made to the complete ball seat assembly (marked under the same part number).

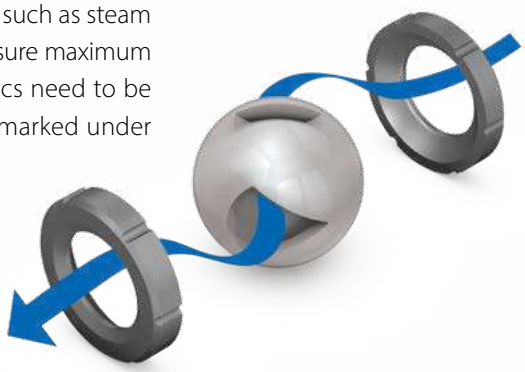

V-Ball

This control valve solution is suited for less demanding control applications, such as clear liquid at a maximum pressure drop of 6 bar (87 psi), or clean gas at a maximum pressure drop of 10 bar (145 psi), and temperatures of 120 °C (248 °F)max. The design, comprised of a floating characterized ball mounted between two seats, maintains a trim preload and bubble-tight shut-off. The V-Ball exerts low torque, making it suitable for smaller actuators that reduce weight and space and are more cost-efficient. V-Balls come in a variety of 'V' and 'slot' shapes, and can be custom designed to meet any control requirement. The V-Ball is available in a wide range of high-alloy materials and coatings for highly corrosive applications.

Flow pattern

V-Port

V-Ball

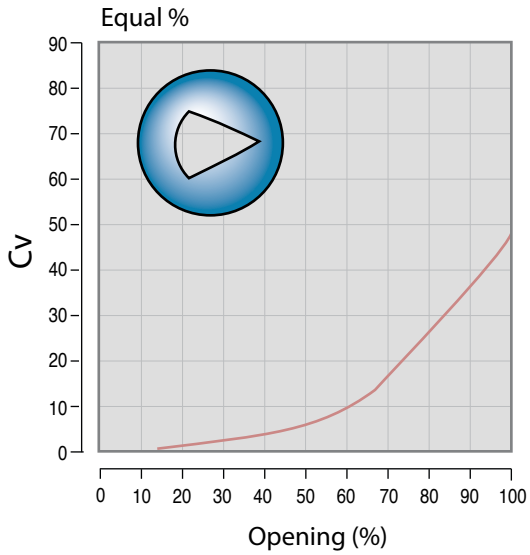

Slot Port

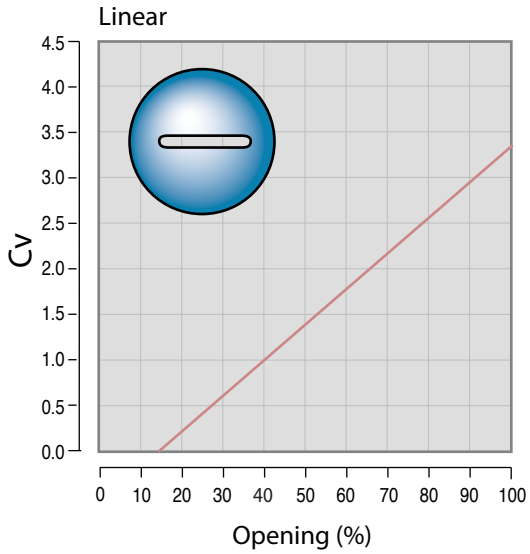

Round Port

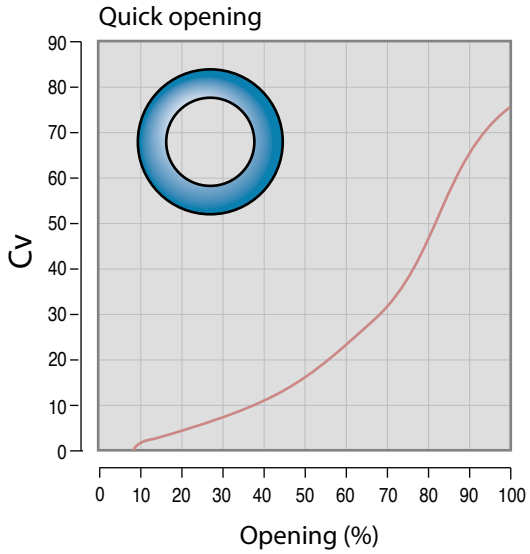

CONTROL VALVES

Design simplicity

Converting a standard Habonim quarter-turn ball valve into an accurate and efficient flow control V-ball valve is equivalent to a routine maintenance procedure. Habonim provides a conversion kit that adapts standard valves to flow control operations. The kit includes a V-Ball with a high tensile, tight tolerance stem and a , hard wearing stem seal and thrust bearing, plus seat and seal materials that are suitable for the most demanding flow control operations.

Zero seat leakage

Habonim control valves undergo meticulous machining and stringent factory testing to ensure bubble-tight shut-off for zero leakage. Leak-tight operation is provided by one of two characterized flow control options. The V-Port option is comprised of a characterized metal seat lapped-in with the ball for a perfect fit, and aided by an upstream spring effect soft-seat, for positive preload. The V-Ball option uses a configuration of two soft-seats.

Both 'V' options ensure zero leakage in the most demanding applications and across a wide range of temperature and pressure requirements. Other valve types, such as globe valves, have been proven completely ineffective in providing bubble-tight shut off without a secondary shut- off valve assembly.

Smaller size - less weight

Habonim's streamlined design dissipates less energy and hence has a higher flow coefficient (Cv) compared with other valve designs such as the tortuous globe valve design). This means that Habonim's smaller size ball valve can be used to handle the same flow as the larger size globe valve.

An entire flow system comprised of smaller valves doing the same job as larger ones will require less space on the line, will weigh less and will provide a more cost efficient and maintenance friendly solution.

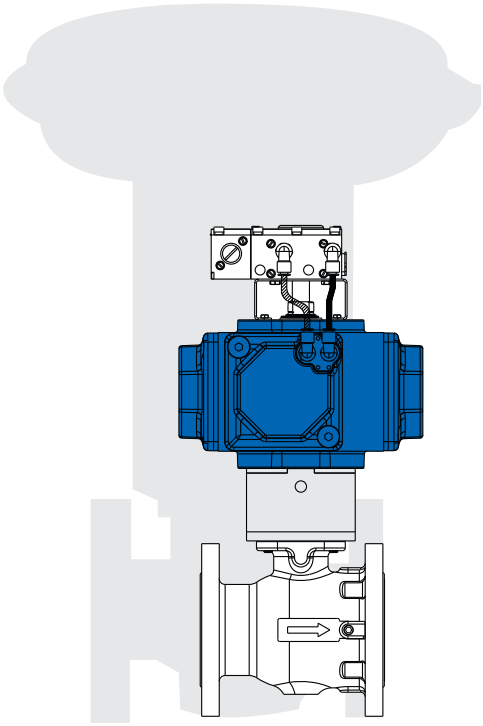

Minimum hysteresis / outstanding repeatability

Optimum control loop performance often hinges on a few carefully designed moving parts within the valve assembly, and how well they work together. The most vulnerable areas in a standard quarter-turn valve are the torque transmission shaft between the positioner and the segmented ball (ball-stem, stem-adaptor, adaptor-actuator, actuator-positioner).

Considerable engineering expertise goes into the design and manufacture of these connecting surfaces to provide the tightest fit possible, which in turn provides uniform movement of all parts along the line of rotation.

Habonim carefully engineers all the adjoining parts to eliminate problems such as backlash, leakage and hysteresis. The result is that the overall control unit has a maximum tolerance of no more than 2%.

Test results measuring identical flow input from both directions illustrates the negligible difference between up- scale and down-scale load.

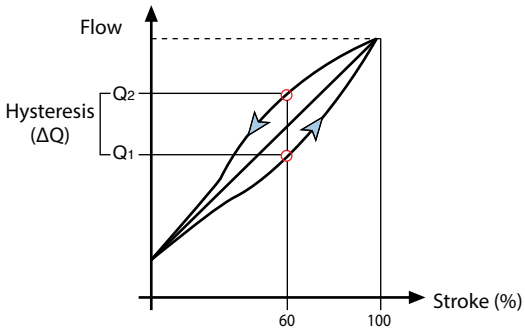

Zero backlash adaptor - Optional (ZB)

Habonim's Zero backlash adaptor design is based on the inherent flexibility of stainless steel.

Two grooves allow the adaptor to clamp the valve stem on one side, whilelocking the actuator gear in place on the other side.

The Zero backlash adaptor ensures repeatability, zero backlash, and virtually no hysteresis for the complete control unit.

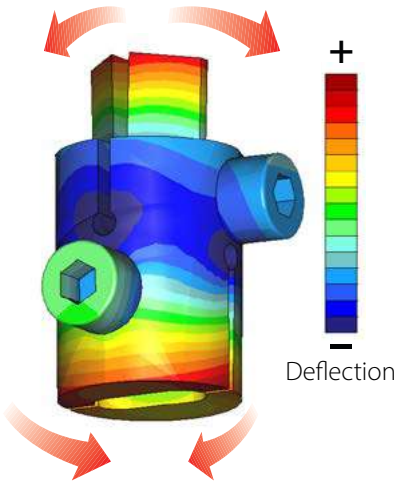

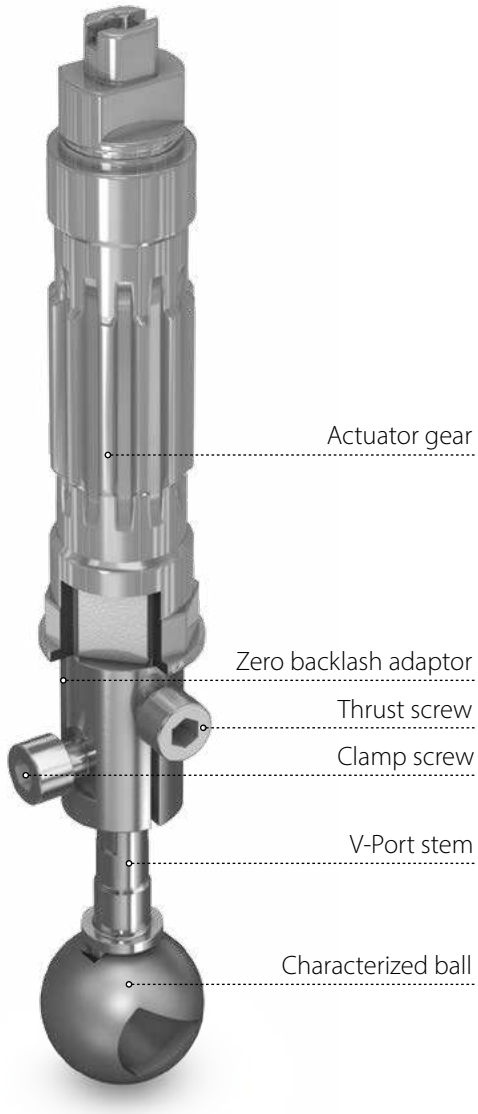

CONTROL VALVES

Less stem seal wear

The Habonim quarter-turn ball valve operation is far less prone to leakage due to resilient seat and seal designs that deliver tighter shut-off, and a stem sealing that requires less torque output from the actuator. This translates into longer lasting, continuous valve operation with minimum upkeep. The rotary movement of Habonim's valves make them safe and simple to automate and they are ideal for flow control operations. In contrast, linear- movement globe valves have a tendency to seize up, are susceptible to blockages, and require constant maintenance to deal with stem leakage problems.

The Habonim valve is fitted with specially designed packing configurations. A variety of packing materials are available to meet the needs of demanding control applications including aggressive media, extreme temperature, and pressure conditions that range from deep vacuum to high pressure. The end result is a high-endurance control valve assembly that is more cost-effective and maintenance-friendly than any other type of actuated valve.

Wide rangeability and stability

Control valve rangeability is the ratio of maximum controllable flow to minimum controllable flow. The Habonim ball valve has an inherently high flow ratio of 1:50..

This unique advantage allows diverse process parameters with the same control unit. However, optimum flow control through the valve is achieved within the 20-80% range of rotation because the hydraulic flow curve is unstable outside the limits of this range.

The Habonim design offers exceptionally wide rangeability with maximum stability of process conditions.

High recovery

A high recovery valve is designed with streamlined internal contours and minimal flow turbulence that dissipates relatively little flow stream energy. Therefore pressure downstream of the valve's vena contracta recovers to a high percentage of its inlet value.

The streamlined interior design of the Habonim valve dissipates little energy, resulting in higher recovery and a more cost efficient flow process, especially when compared with the tortuous flow globe valve.

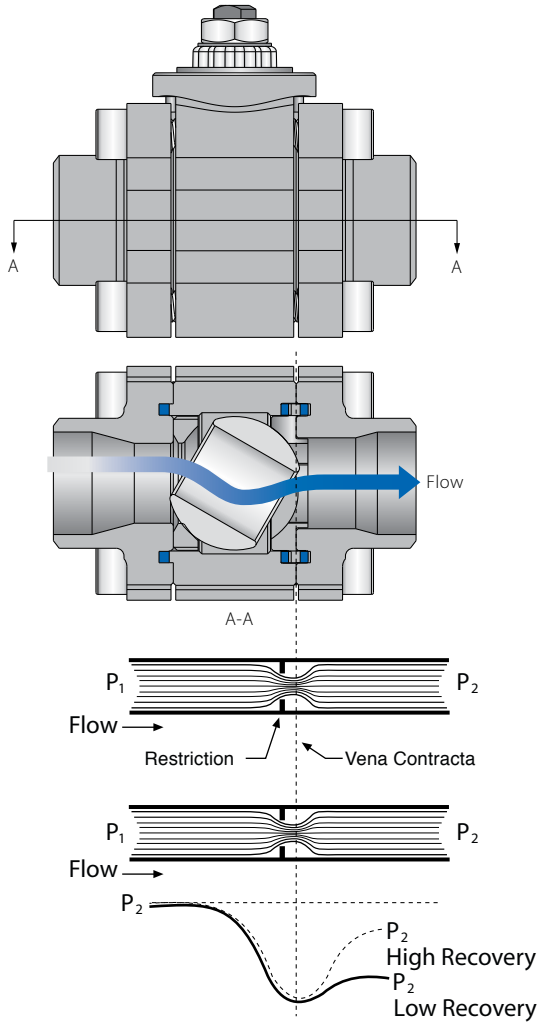
A
A
Flow
A-A
P1
P2
Flow
Restriction
Vena Contracta
P1
P2
Flow
P2
P2
High Recovery
P2
Low Recovery

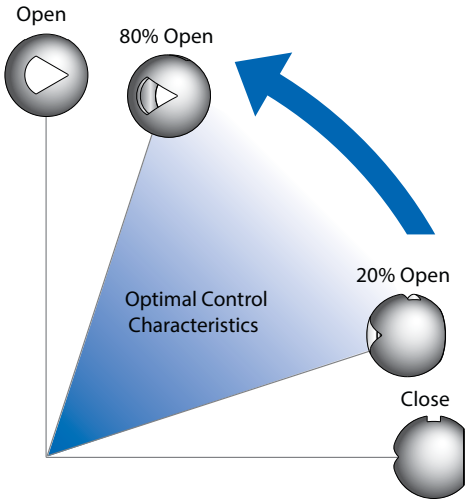
Open
80% Open
Optimal Control
Characteristics
20% Open
Close

CONTROL VALVES

Calculations

Flow equation		
Fluid	**Service condition**	**Equation**
Liquid	Sub-critical condition $\Delta P < FL_2 (P_1\text{-}P_V)$	$C_V = 1.17 \bullet Q_L \bullet \sqrt{\frac{G_L}{\Delta P}}$ or $C_V = \frac{1.17 \bullet W_L}{\sqrt{\Delta P \bullet G_L}}$
	Critical condition $\Delta P < FL_2 (P_1\text{-}P_V)$	$C_V = \frac{1.17 \bullet Q_L}{F_L} \bullet \sqrt{\frac{G_L}{(P_1 - P_V)}}$ or $C_V = \frac{1.17 \bullet W_L}{F_L \bullet \sqrt{(P_1 - P_V) \bullet G_L}}$
Gas	$X < FK \cdot XT$	$C_V = \frac{Q_g}{387 \bullet P_1 \bullet Y} \bullet \sqrt{\frac{G_g \bullet T_1 \bullet Z}{X}}$ or $C_V = \frac{W_g}{27.1 \bullet Y \bullet \sqrt{X \bullet P_1 \bullet \rho_1}}$
	$X => FK \cdot XT$	$C_V = \frac{Q_g}{258 \bullet P_1} \bullet \sqrt{\frac{G_g \bullet T_1 \bullet Z}{F_K \bullet X_T}}$ or $C_V = \frac{W_g}{18.1 \bullet \sqrt{F_K \bullet X_T \bullet P_1 \bullet \rho_1}}$
Saturated steam	$X < FK \cdot XT$	$C_V = \frac{W_g}{19.3 \bullet P_1 \bullet Y \bullet \sqrt{X}}$
	$X => FK \cdot XT$	$C_V = \frac{W_g}{12.9 \bullet P_1 \bullet \sqrt{F_K \bullet X_T}}$
Superheated steam	$X < FK \cdot XT$	$C_V = \frac{W_g \ (1+0.00126 \bullet \Delta t)}{19.3 \bullet P_1 \bullet Y \bullet \sqrt{X}}$
	$X => FK \cdot XT$	$C_V = \frac{W_g \bullet (1+0.00126 \bullet \Delta t)}{12.9 \bullet P_1 \bullet \sqrt{F_K \bullet X_T}}$

Glossary

Cv:	Valve flow coefficient
F_L:	Liquid pressure recovery factor of a valve without attached fittings (dimensionless) - Refer to Table 1
G_L:	Liquid specific gravity (1.0 for water @ 15°C)
P_1:	Upstream absolute static pressure (kgf/cm²A)
P_2:	Downstream absolute static pressure (kgf/cm²A)
P_V:	Absolute vapour pressure of liquid at inlet temperature (kgf/cm²A) - Refer to Table 2
ΔP:	Differential pressure (P1-P2) (kgf/cm²)
Q_L:	Volumetric flow rate of liquid (m³/h)
W_L:	Weight or mass flow rate of liquid (t/h)
G_g:	Gas specific gravity - Refer to Table 3
Q_g:	Volumetric flow rate of gas (m³/h)
X:	Ratio of pressure drop (ΔP/P1)
X_T:	Pressure drop ratio factor (dimensionless) - Refer to Table 1
W_g:	Gas or steam mass flow rate (kg/h)
ρ1:	Specific gravity, upstream conditions (kg/m³).
F_K:	Ratio of specific heat factors, (dimensionless) - Refer to Table 3
Y:	Expansion factor $= 1 - \frac{X}{3 \bullet F_K \bullet X_T}$
T_1:	Absolute upstream temperature (K)
Δt:	Upstream superheated steam temperature (°C)
Z:	Compressibility factor, dimensionless = 1

Table 1

		Percent of valve rotation (degree of rotation)										
		0(0)	10(9)	20(18)	30(27)	40(36)	50(45)	60(54)	70(63)	80(72)	90(81)	100(90)
Equal %	F_L	0.00	0.96	0.95	0.94	0.93	0.92	0.90	0.88	0.86	0.82	0.75
	X_T	0.00	0.72	0.65	0.60	0.54	0.48	0.42	0.36	0.28	0.16	0.12
Round port	F_L	0.00	0.92	0.91	0.91	0.90	0.86	0.80	0.72	0.61	0.61	0.50
	X_T	0.00	0.78	0.74	0.71	0.67	0.62	0.56	0.49	0.38	0.26	0.15

Table 2

Pv factor		
Liquid	**Formula**	**Pv**
Acetone	C_2H_4	47.861
Acetic acid	$C_2H_4O_2$	0.0273
Ammonia	NH_3	0.7310
Benzene	C_6H_6	0.1621
Butane	C_4H_{10}	2.89
Carbon dioxide	CO_2	58.420
Ethene	C_2H_6	47.861
Ethanol	C_2H_6O	0.1029
Ethylene glycol	$C_2H_4(OH)_2$	69.58 e-6
Glycerin	$C_3H_5(OH)_3$	110.50 e-9
Nitrogen	-	0.988
OIL WT32	-	205.48 e-6
OIL WT46	-	306.59 e-6
Sulfur dioxide	SO_2	3.3929
Water	H_2O	0.0238

Table 3

Gg and Fk factors			
Gas	**Formula**	**Gg**	**Pk**
Air	-	1.00	1.00
Ammonia	NH_3	0.59	0.92
Argon	Ar	1.38	1.19
Carbon dioxide	CO_2	1.52	0.91
Carbon monoxide	CO	0.97	1.01
Ethylene	C_2H_4	0.97	0.87
Chlorine	Cl_2	2.49	0.96
Ethane	C_2H_6	1.05	0.87
Helium	He	0.14	1.19
Hydrogen	H_2	0.07	1.00
Methane	CH_4	0.55	0.90
Oxygen	O_2	1.10	1.00
Nitrogen	N_2	0.97	1.00
Saturated steam	H_2O	-	0.94
Superheated steam	H_2O	-	0.94

Habonim's valve sizing software (HVS) is available to download from Habonim website: **www.habonim.com**, to support sizing

Flow Coefficient - Cv

Equal %

½"- 1"

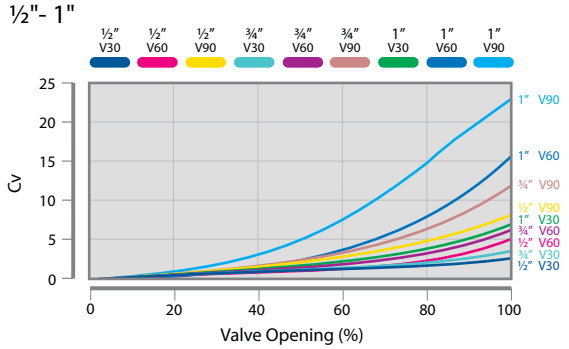

1¼"- 2"

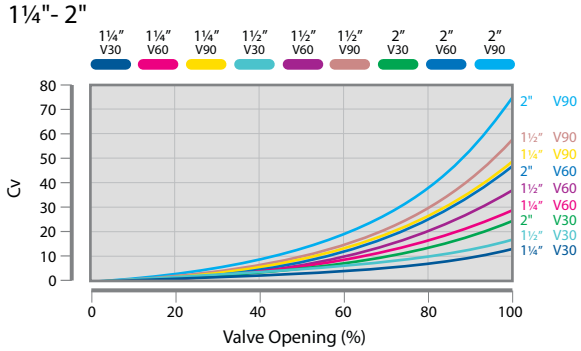

2½"- 4"

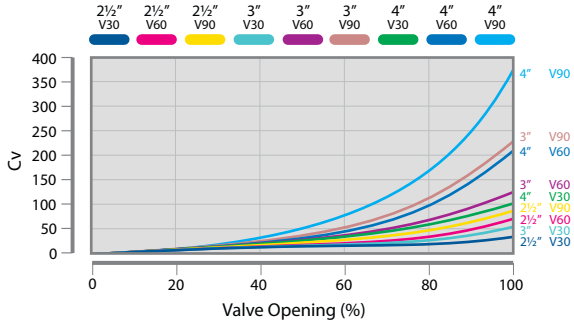

4"FB - 8"

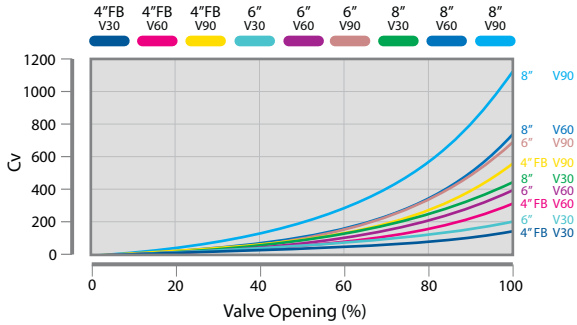

Valve size	V shape	Percent of valve rotation (degree of rotation)										
		0(0)	10(9)	20(18)	30(27)	40(36)	50(45)	60(54)	70(63)	80(72)	90(81)	100(90)
½"	V30	0.00	0.05	0.118	0.236	0.405	0.624	0.880	1.200	1.550	1.954	2.380
	V60	0.00	0.07	0.161	0.378	0.670	1.000	1.450	2.050	2.780	3.710	4.960
	V90	0.00	0.10	0.230	0.570	1.050	1.770	2.710	3.740	4.940	6.270	8.100
¾"	V30	0.00	0.02	0.130	0.270	0.440	0.650	0.940	1.300	1.750	2.370	3.200
	V60	0.00	0.10	0.270	0.570	1.040	1.550	2.210	2.930	3.850	5.040	6.480
	V90	0.00	0.10	0.400	0.860	1.620	2.600	3.730	5.220	6.870	8.800	11.200
1"	V30	0.00	0.06	0.178	0.420	0.840	1.460	2.230	3.160	4.130	5.300	6.900
	V60	0.00	0.13	0.350	0.924	1.720	2.640	4.070	5.780	8.150	10.950	15.170
	V90	0.00	0.22	0.810	1.680	3.050	4.600	6.960	9.950	13.720	18.590	23.200
1¼"	V30	0.00	0.11	0.344	0.811	1.621	2.818	4.304	6.099	7.971	10.229	13.317
	V60	0.00	0.24	0.676	1.783	3.320	5.095	7.855	11.155	15.730	21.134	29.278
	V90	0.00	0.43	1.563	3.242	5.887	8.878	13.433	19.204	26.480	35.879	50.200
1½"	V30	0.00	0.17	0.598	0.989	1.679	2.875	4.600	6.670	9.856	13.513	17.733
	V60	0.00	0.26	0.713	2.036	3.611	6.440	9.890	13.800	19.320	27.945	37.375
	V90	0.00	0.48	1.281	3.335	6.095	10.350	14.835	21.160	29.210	41.200	58.200
2"	V30	0.00	0.19	0.800	1.900	3.100	4.900	6.860	9.540	13.160	17.900	24.400
	V60	0.00	0.34	0.970	2.880	5.400	8.200	12.100	17.700	25.100	34.300	48.400
	V90	0.00	0.55	1.571	4.200	8.100	12.600	18.300	26.900	37.600	53.200	74.600
2½"	V30	0.00	0.38	1.010	2.470	4.200	6.400	9.240	13.320	18.260	24.300	32.300
	V60	0.00	0.54	1.340	4.180	8.400	11.300	17.300	25.100	36.000	52.200	70.000
	V90	0.00	0.77	2.140	6.340	11.900	16.700	24.800	34.000	48.000	64.000	84.000
3"	V30	0.00	0.50	1.600	3.700	7.200	11.600	17.600	24.700	32.400	42.300	52.900
	V60	0.00	0.81	1.860	6.340	12.700	20.400	32.200	47.900	67.000	93.100	122.000
	V90	0.00	1.22	3.040	9.370	19.100	28.600	47.300	73.900	112.500	162.000	225.000
4"	V30	0.00	1.00	1.000	4.500	11.500	20.500	31.500	43.700	58.000	79.000	102.000
	V60	0.00	1.47	2.660	8.500	18.290	31.800	43.000	68.000	104.000	148.600	206.000
	V90	0.00	2.18	4.890	13.400	28.000	45.400	73.000	111.100	166.000	240.000	360.000
4" FB	V30	0.00	1.53	2.590	6.885	17.595	31.365	48.195	66.861	88.740	120.870	156.060
	V60	0.00	2.25	4.070	13.005	27.984	48.654	65.790	104.040	159.120	227.358	315.180
	V90	0.00	3.34	7.482	20.502	42.840	69.462	111.690	169.983	253.980	367.200	550.800
6"	V30	0.00	1.91	3.200	8.595	21.965	39.155	60.165	83.467	110.780	150.890	194.820
	V60	0.00	2.81	5.081	16.235	34.934	60.738	82.130	129.880	198.640	283.826	393.460
	V90	0.00	4.16	9.340	25.594	53.480	86.714	139.430	212.201	317.060	458.400	687.600
8"	V30	0.00	3.15	4.200	14.175	36.225	64.575	88.000	137.655	218.000	298.000	421.000
	V60	0.00	4.63	8.379	26.775	57.614	91.000	135.450	214.200	327.600	468.090	723.000
	V90	0.00	6.87	15.404	42.210	88.200	143.010	229.950	349.965	522.900	756.000	1134.000

CONTROL VALVES

Flow Coefficient - Cv

Valve size	Slot shape	Percent of valve rotation (degree of rotation)					
		0(0)	10(9)	20(18)	30(27)	40(36)	50(45)
½"	0.8	0.00	0.00	0.038	0.078	0.120	0.162
	1.6	0.00	0.00	0.107	0.224	0.347	0.475
	3.2	0.00	0.00	0.187	0.383	0.583	0.770
¾"	0.8	0.00	0.00	0.05	0.11	0.16	0.21
	1.6	0.00	0.00	0.14	0.28	0.43	0.57
	3.2	0.00	0.00	0.23	0.47	0.73	0.98
1"	0.8	0.00	0.00	0.080	0.152	0.225	0.304
	1.6	0.00	0.00	0.238	0.495	0.739	0.988
	3.2	0.00	0.00	0.374	0.765	1.170	1.600

Valve size	Slot shape	Percent of valve rotation (degree of rotation)				
		60(54)	70(63)	80(72)	90(81)	100(90)
½"	0.8	0.202	0.242	0.284	0.324	0.366
	1.6	0.595	0.720	0.840	0.970	1.111
	3.2	0.957	1.152	1.360	1.574	1.800
¾"	0.8	0.27	0.33	0.38	0.44	0.49
	1.6	0.71	0.86	1.01	1.16	1.33
	3.2	1.24	1.50	1.76	2.00	2.30
1"	0.8	0.380	0.463	0.545	0.618	0.710
	1.6	1.232	1.473	1.728	1.965	2.210
	3.2	2.035	2.450	2.900	3.316	3.700

Linear characteristics

½"- 1"

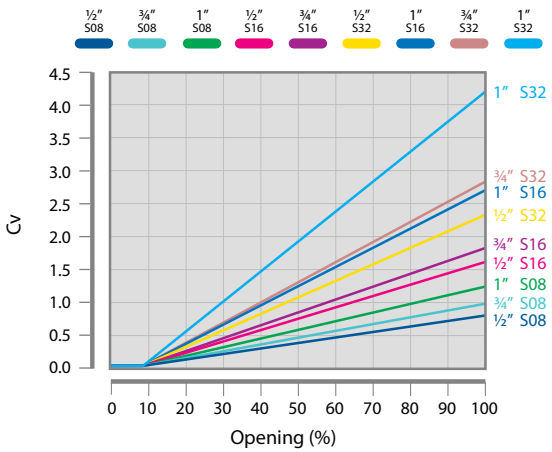

Quick opening characteristics

½"- 2"

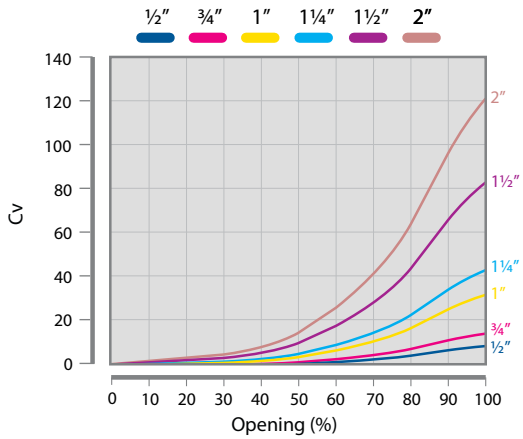

Quick opening characteristics

2 ½"- 8"

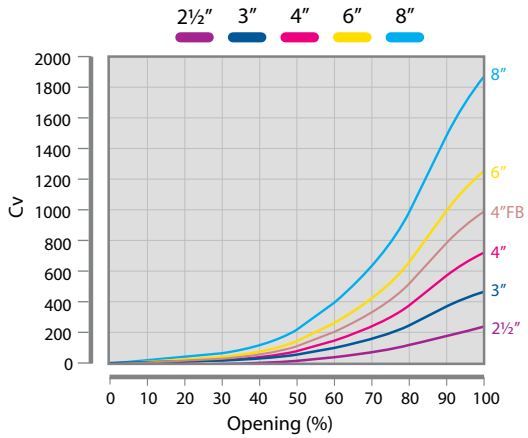

Valve size	Percent of valve rotation (degree of rotation)										
	0(0)	10(9)	20(18)	30(27)	40(36)	50(45)	60(54)	70(63)	80(72)	90(81)	100(90)
½"	0.00	0.15	0.29	0.46	0.70	1.09	1.76	2.60	4.30	6.40	8.00
¾"	0.00	0.21	0.43	0.70	1.05	1.62	2.64	4.00	6.40	9.60	12.00
1"	0.00	0.58	1.15	1.90	2.80	4.30	7.00	10.50	17.00	26.00	32.00
* 1¼"	0.00	0.83	1.65	2.67	4.05	6.50	10.00	15.20	24.60	36.00	42.80
1½"	0.00	1.48	2.95	4.75	7.20	11.00	18.00	27.00	44.00	65.50	82.00
2"	0.00	2.16	4.33	6.95	10.50	16.20	26.40	39.60	64.00	96.00	120.00
* 2½"	0.00	4.30	9.10	15.60	23.70	34.60	52.50	83.00	126.00	185.00	256.00
3"	0.00	8.20	16.20	26.00	40.00	61.00	100.00	148.00	240.00	360.00	450.00
4"	0.00	13.10	26.00	42.10	63.10	97.20	159.00	238.00	385.00	575.00	720.00
* 4" FB	0.00	16.00	31.00	51.00	76.00	117.00	192.00	288.00	465.00	695.00	870.00
** 6"	0.00	18.40	36.70	59.00	90.00	138.00	224.00	338.00	545.00	815.00	1020.00
** 8"	0.00	34.00	68.00	109.00	165.00	254.00	415.00	620.00	1010.00	1500.00	1880.00

* Available with N47 Series only
** Available with N31/N32 Series only

Manual Control

Habonim has developed a convenient and economical manual operation control valve package that provides a cost effective flow control solution for process applications that do not demand dynamic adjustment or the use of a fully automated control unit with sensors, positioners and various additional control devices. If the flow process is stable and accurate dynamic adjustment is not an issue, then Habonim's manual control package permits manual setting of the process parameters to a specified angular ball position.

Habonim's angular positioning device is comprised of a polished stainless steel 'Scale' (0°- 90°), mounted on top of the valve's ISO pad. The oval handle is designed with an integrated pointer that indicates the angle of the opening position. To avoid unintentional rotation of the valve stem, Habonim offers a special multi-position lockable handle.

D Series

3-Way control valve

"Habonim" D Series 3-way control valve, fitted with a V-Port characterized metal seat, provides accurate diverting or mixing over a wide range of flow rates for various applications.

Diverting

Diverter valves direct flow from the inlet towards two outlets simultaneously. The opening of each outlet port is determined by the process requirement translated into a PLC signal. A T-Port ball lapped with a V-notch metal seat on one side provides equal percentage hydraulic characteristics for the flow process loop. The round port on the other side of the ball re-circulates the surplus flow while eliminating increased pressure in the valve inlet.

Mixing

Mixing valves are designed to combine the flow of two inlets into a single outlet. They are used in industrial applications where specific concentrations must be combined and regulated or their temperature maintained. Optimum performance is achieved with equal pressure on both inlets.

Applications for the D Control Valve Series for both flow configurations (diverting or mixing) include: refineries, chemical plants and oil production, all of which use boilers, coolers, heaters and condensers. They are also ideal for engines, turbines, gear boxes and heat exchanges, where air cooling, fuel and lube oil preheating, co-generation and engine jacket water demand precise control.

The D Series can also be fitted with a range of accessories from position feedback to full control capabilities.

CONTROL VALVE SIZER SOFTWARE (HVS)

Habonim's Valve Sizer Software (HVS)

Habonim Valve Sizer (HVS) is a unique software tool which simplifies the task of selecting the perfect control valve package for most services. HVS has access to a database of over 5,800 different media. Accurate calculations of process Cv, valve opening percentages, velocity, critical condition warnings and predicted noise levels are just some of the many features provided by HVS in a variety of output formats. Operating in accordance with International Standards of IEC60534 and ISA 75-17 1989, HVS can be used for multiple requirements as well as individual packages.

Available to download free of charge from Habonim website: https://www.habonim.com/control-valve-sizer-hvs/

Define the process

HVS leads the engineer step-by-step through all the parameters needed to accurately define the process from the first operating point. Simultaneously, HVS calculates the flow rate according to IEC 60534 and ISA S75-17 1989, including gases and vapors. HVS provides the industry's most comprehensive database of coefficient parameters for more than 5,800 flow media, including density, vapor pressure, critical pressure, and saturated steam temperature at a given pressure.

Select the control valve

With the process now defined, HVS displays a list of all the control valves that meet the process acceptance criteria. Once the desired valve is chosen, HVS indicates the velocity through the valve, angle of rotation, valve modifiers and more.

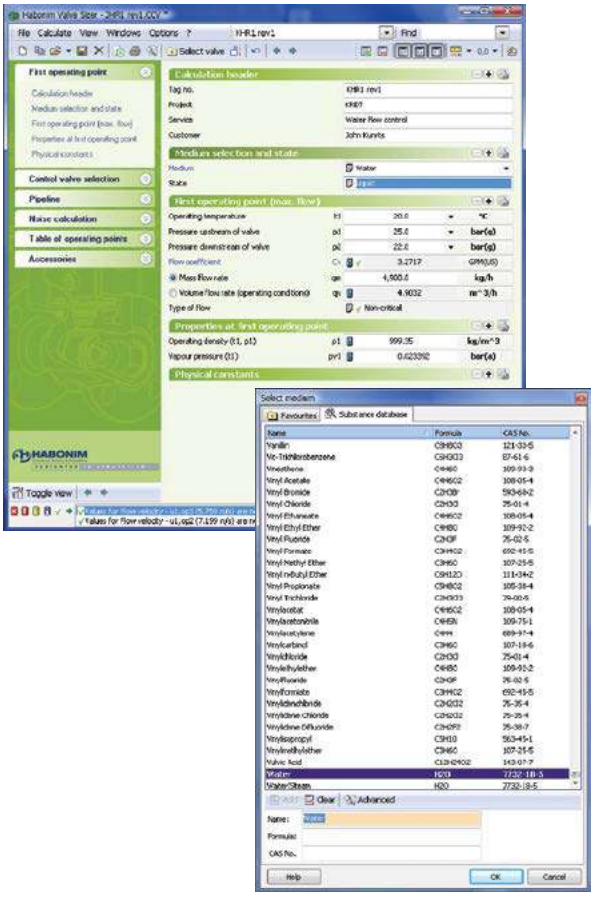

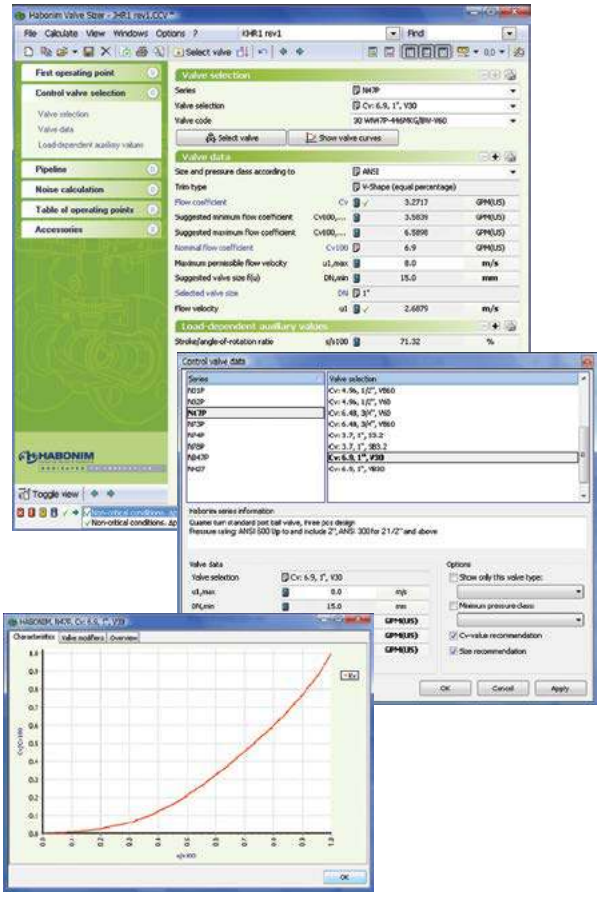

Habonim's Valve Sizer Software (HVS)

Dynamic Cv correction

Unique among industry software tools, HVS automatically performs a correction of the flow rate calculation, taking into account the resistance of installed fittings.

Noise level calculation

Unlike most control sizing software programs, HVS calculate the sound pressure level for both liquids and gases. HVS provides sound pressure level at a distance of 1 m from the valve surface, and then presents the spectrum of sound levels, by frequency, in both table and bar graph format.

Define multiple operating points (min, mean, max)

It is easy to add up to two additional operating points. There is no need to re-type the parameters for each additional point - either accept the default values for the maximum flow rate or modify them as needed.

A complete control package!

In the Accessories section you can select the best pneumatic actuator and positioner for safe operation, in accordance with site standards. HVS guides you with simple, drop-down menus to complete the definition of the service point.

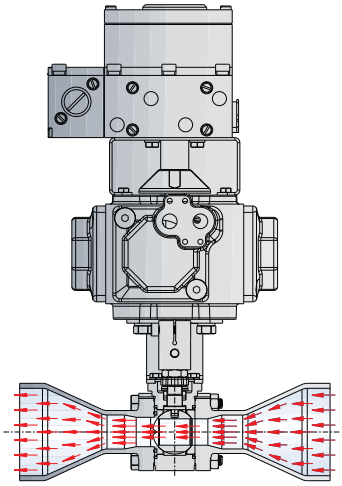

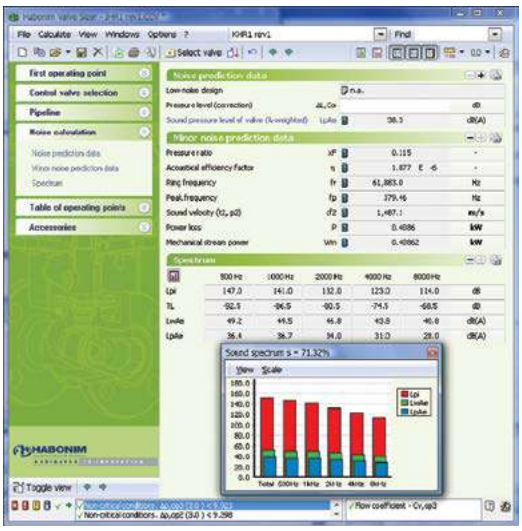

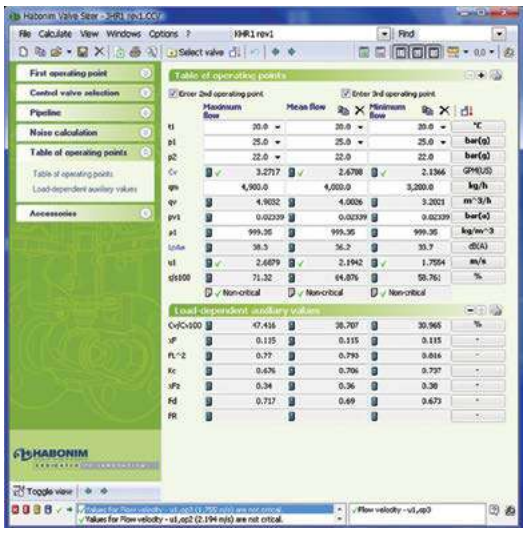

CONTROL VALVE SIZER SOFTWARE (HVS)

Generate detailed summary reports

HVS summarizes all the engineering data of the defined control valve configuration in an easy-to-read report. All program inputs, process data, HVS-calculations, fluid and pipe data, valve data can be displayed, in addition to numerous other fields. The HVS summary report can be output in a number of convenient formats including ISA and HVS.

HVS provides many accessible tutorial aids throughout the HVS program, providing answers to most questions. For further assistance, please contact the Habonim support team at: hvs@habonim.com

Download HVS at www.habonim.com

You can download a FREE copy of the newest version of HVS from the Habonim website. Follow the installation instructions and save the program to your local workstation.

Once the installation is complete, just click the HVS icon on your desktop or run it from the Windows® Start menu. Email the simple registration form and you will soon receive a personal license code from the HVS support team.

Save the license to your computer and you now have access to this powerful engineering tool.

As an HVS registered user you will benefit from free future software updates, Habonim newsletters, new product announcements and success stories.

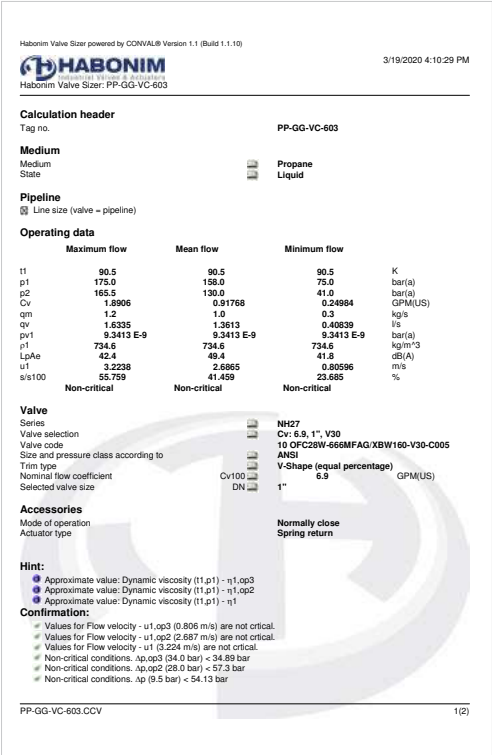

Habonim Valve Sizer powered by CONVAL® Version 1.1 (Build 1.1.10)

HABONIM Industrial Valves & Actuators

3/19/2020 4:10:29 PM

Habonim Valve Sizer: PP-GG-VC-603

Calculation header

Tag no. **PP-GG-VC-603**

Medium

Medium **Propane**

State **Liquid**

Pipeline

Line size (valve = pipeline)

Operating data

	Maximum flow	Mean flow	Minimum flow	
t1	90.5	90.5	90.5	K
p1	175.0	158.0	75.0	bar(a)
p2	165.5	130.0	41.0	bar(a)
Cv	1.8906	0.91768	0.24984	GPM(US)
qm	1.2	1.0	0.3	kg/s
qv	1.6335	1.3613	0.40839	l/s
pv1	9.3413 E-9	9.3413 E-9	9.3413 E-9	bar(a)
ρ1	734.6	734.6	734.6	kg/m^3
LpAe	42.4	49.4	41.8	dB(A)
u1	3.2238	2.6865	0.80596	m/s
s/s100	55.759	41.459	23.685	%
	Non-critical	Non-critical	Non-critical	

Valve

Series **NH27**

Valve selection **Cv: 6.9, 1", V30**

Valve code **10 OFC28W-666MFAG/XBW160-V30-C005**

Size and pressure class according to **ANSI**

Trim type **V-Shape (equal percentage)**

Nominal flow coefficient Cv100 **6.9** GPM(US)

Selected valve size DN **1"**

Accessories

Mode of operation **Normally close**

Actuator type **Spring return**

Hint:

- Approximate value: Dynamic viscosity (t1,p1) - η1,op3
- Approximate value: Dynamic viscosity (t1,p1) - η1,op2
- Approximate value: Dynamic viscosity (t1,p1) - η1

Confirmation:

- Values for Flow velocity - u1,op3 (0.806 m/s) are not crtical.
- Values for Flow velocity - u1,op2 (2.687 m/s) are not crtical.
- Values for Flow velocity - u1 (3.224 m/s) are not crtical.
- Non-critical conditions. Δp,op3 (34.0 bar) < 34.89 bar
- Non-critical conditions. Δp,op2 (28.0 bar) < 57.3 bar
- Non-critical conditions. Δp (9.5 bar) < 54.13 bar

PP-GG-VC-603.CCV 1(2)

FLOATING BALL

3 PIECE

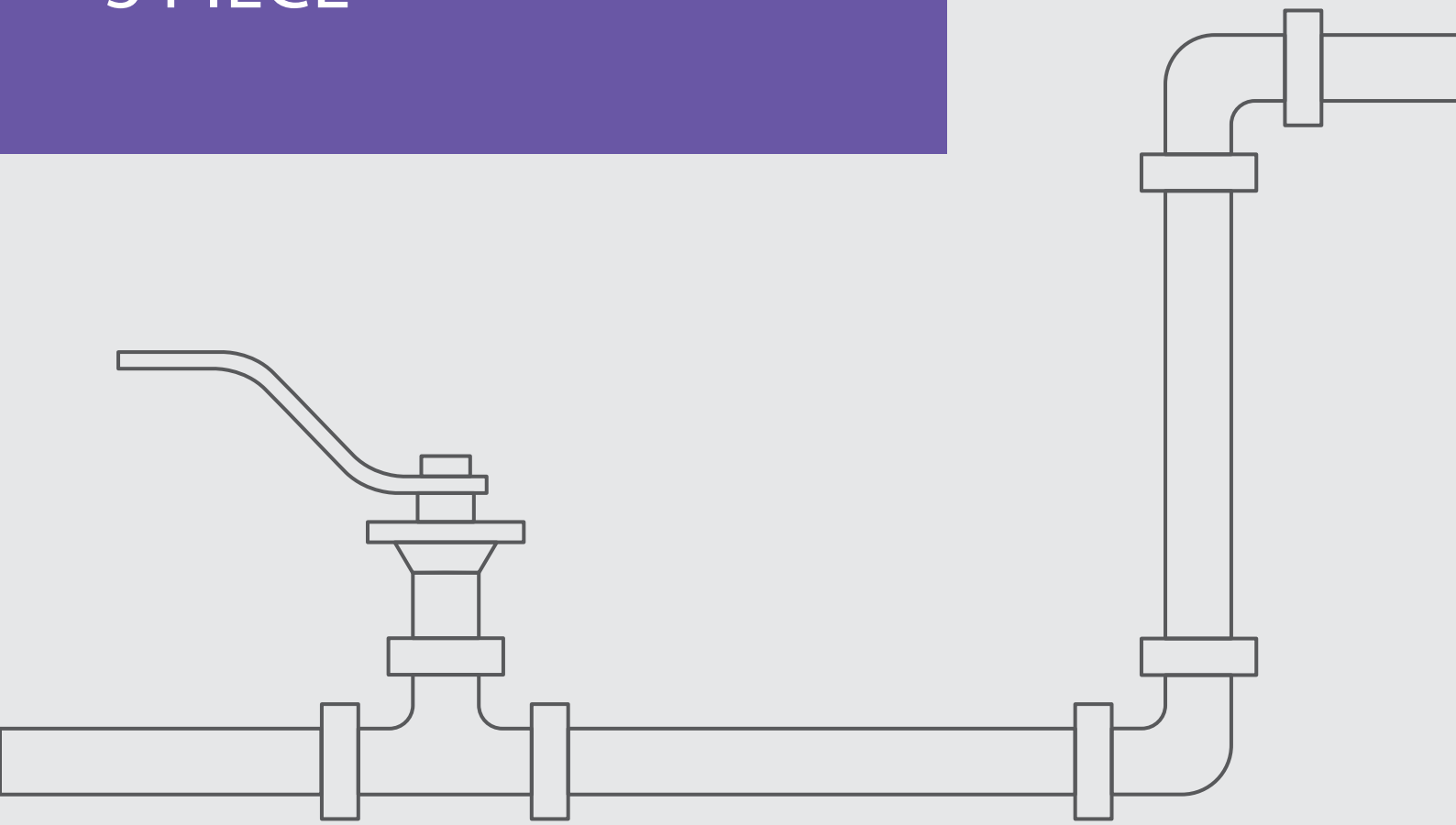

Control Floating Ball 3 Piece

Components & Materials

V Port

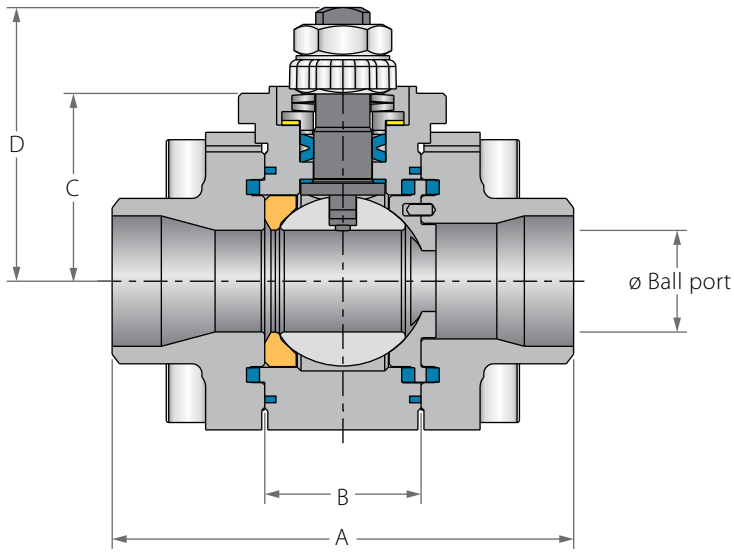

V Ball

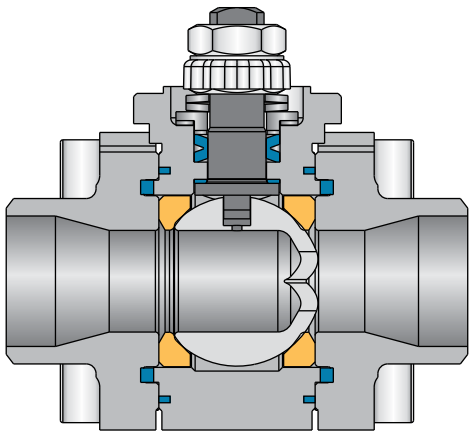

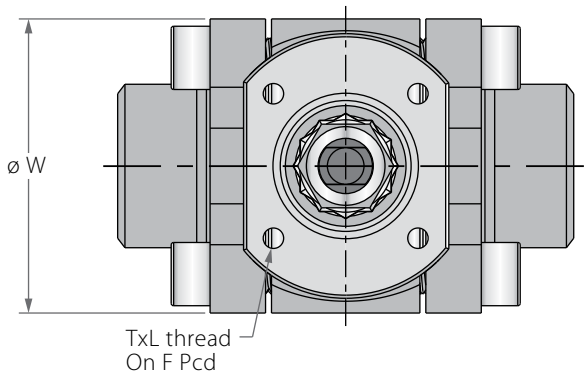

Preparation for actuation

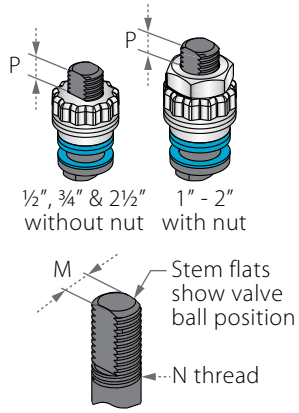

Valve Face To Face sizes are according to Habonim catalog data only, for Extended-weld/Flanged/Tri-clamp end see Face To Face sizes page.

Std. port	Full port	Unit	Ball port	A	B	C	D	W	M	N	P	F		TxL	Weight kg/lb
DN15	DN10	mm	11.15	66.0	20.60	29.0	38.70	47.0	5.54	⅜" UNF	6.65	F03	36.0	M5X10	0.60
½"	⅜"	inch	0.44	2.60	0.81	1.14	1.52	1.85	0.22		0.26		1.42		1.33
DN20	DN15	mm	14.30	70.60	24.50	31.40	40.30	53.70	5.54	⅜" UNF	6.65	F03	36.0	M5X10	0.80
¾"	½"	inch	0.56	2.78	0.97	1.24	1.59	2.11	0.22		0.26		1.42		1.77
DN25	DN20	mm	20.60	93.70	31.70	38.20	55.60	63.70	7.54	7/16" UNF	7.40	F04	42.0	M5X10	1.60
1"	¾"	inch	0.81	3.69	1.25	1.50	2.19	2.51	0.30		0.29		1.65		3.54
DN32	DN25	mm	25.40	108.0	41.30	42.70	60.20	71.70	7.54	7/16" UNF	7.40	F04	42.0	M5X10	2.50
1¼"	1"	inch	1.0	4.25	1.62	1.68	2.37	2.82	0.30		0.29		1.65		5.53
DN40	DN32	mm	31.80	115.50	48.40	43.60	73.0	86.70	8.71	9/16" UNF	8.50	F05	50.0	M6X12	3.60
1½"	1¼"	inch	1.25	4.55	1.91	1.72	2.87	3.41	0.34		0.33		1.97		7.96
DN50	DN40	mm	38.10	128.0	56.30	48.30	77.80	96.90	8.71	9/16" UNF	8.50	F05	50.0	M6X12	4.50
2"	1½"	inch	1.50	5.04	2.22	1.90	3.06	3.82	0.34		0.33		1.97		9.95
DN50	DN50	mm	50.80	158.0	72.60	70.0	88.10	108.0	8.71	9/16" UNF	13.50	F07	70.0	M8X12	9.50
2½"	2"	inch	2.0	6.22	2.86	2.76	3.47	4.25	0.34		0.53		2.76		21.0

[1] 2½" (DN65) size maximum pressure rating is Class 600.

Control Floating Ball 3 Piece

Components & Materials

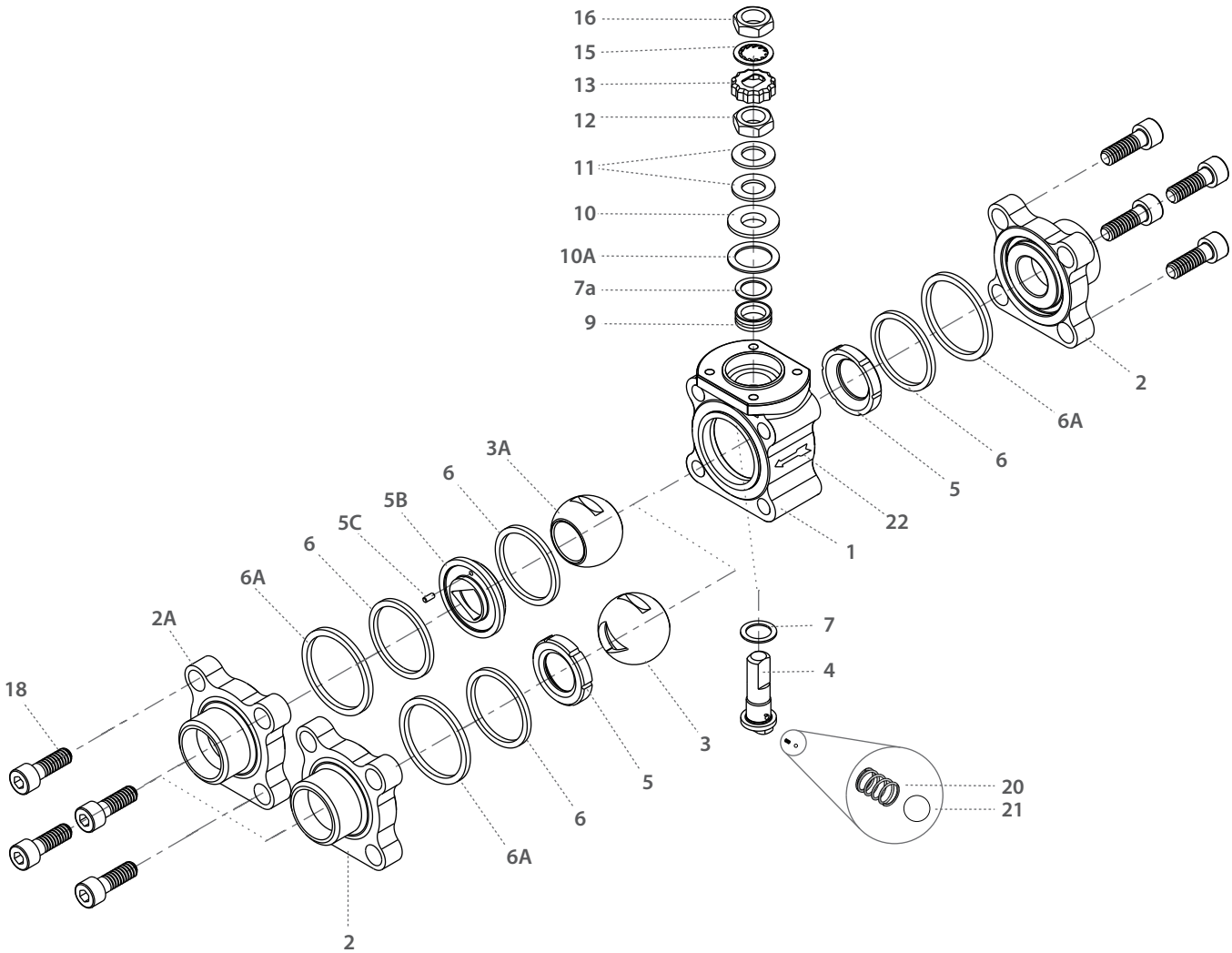

Item	Description	Material specification	Qty.
1	Body	Acc. Ordering Code	1
2	End	Acc. Ordering Code	1-2
2A	V- Port End	Acc. Ordering Code	1
3	V Ball	Acc. Ordering Code	1
3A	Ball	Acc. Ordering Code	1
4	Stem	Acc. Ordering Code	1
5*	Seat	Acc. Ordering Code	1-2
5B	V Seat	Acc. Ordering Code	1
5C	Dowel Pin	S. Steel	1
6*	Body Seal	Acc. Ordering Code	2-3
6A*	Outer Seal	Acc. Ordering Code	2
7*	Stem Thrust Seal	PEEK, CF PEEK, PCTFE	1

Item	Description	Material specification	Qty.
7a*	Anti-Abrasion Ring	PEEK, CF PEEK, PCTFE	1
9*	Stem Seal	CF PTFE, TFM	1
10	Follower	S. Steel	1
10A*	Slide Bearing	S. Steel	1
11	Disc Spring	S. Steel	2
12	Stem Nut	S. Steel	1
13	Locking Clip	S. Steel	1
16	Handle Nut	S. Steel	1
18	Body Bolts	S. Steel	8
22	Arrow Flow	S. Steel	1
23	Tag (not shown)	S. Steel	1

* Maintenance kit components

Control Floating Ball 3 Piece

Valve Dimensions

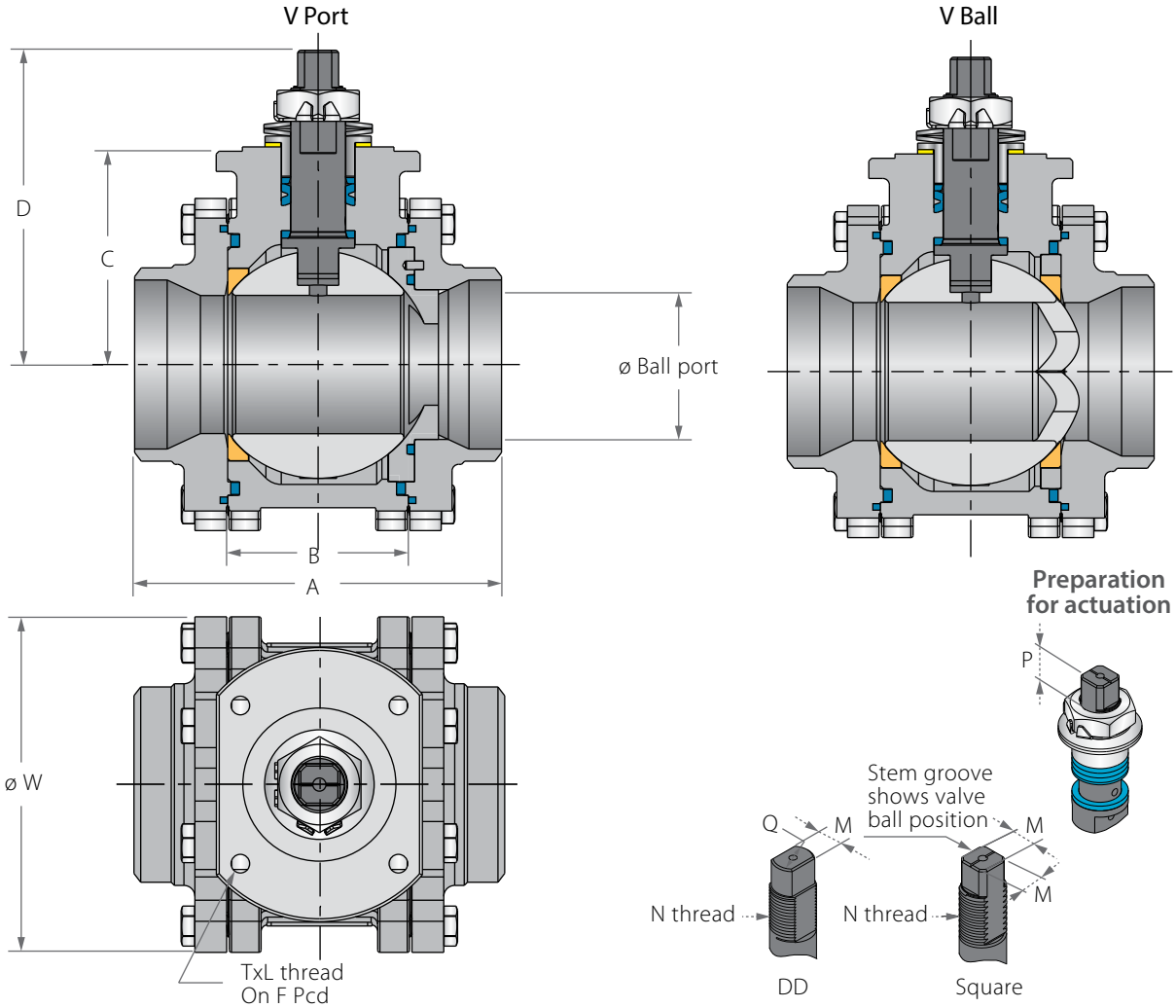

Valve Face To Face sizes are according to Habonim catalog data only, for Extended-weld/Flanged/Tri-clamp end see Face To Face sizes page.

Std. port	Full port	Unit	Ball port	A	B	C	D	W	M	N	P	Q	F		TxL	Weight kg/lb
DN80	DN65	mm	63.50	169.0	83.30	98.30	144.90	140.0	18.90	1"-14 UNS-2A	16.70	22.70	F10	102.0	M10x20	13.70
3"	2½"	inch	2.50	6.65	3.28	3.87	5.71	5.50	0.74		0.66	0.89		4.02		30.30
DN100	DN80	mm	82.60	214.0	108.80	114.10	160.70	177.0	18.90	1"-14 UNS-2A	16.70	22.70	F10	102.0	M10x20	23.70
4"	3"	inch	3.25	8.43	4.28	4.49	6.33	6.97	0.74		0.66	0.89		4.02		52.40
	DN100	mm	100.0	239.0	123.0	124.0	170.50	217.0	18.90	1"-14 UNS-2A	16.70	22.70	F10	102.0	M10x20	30.00
	4"	inch	3.94	9.41	4.84	4.88	6.71	8.54	0.74		0.66	0.89		4.02		66.30

Control Floating Ball 3 Piece

Valve Dimensions

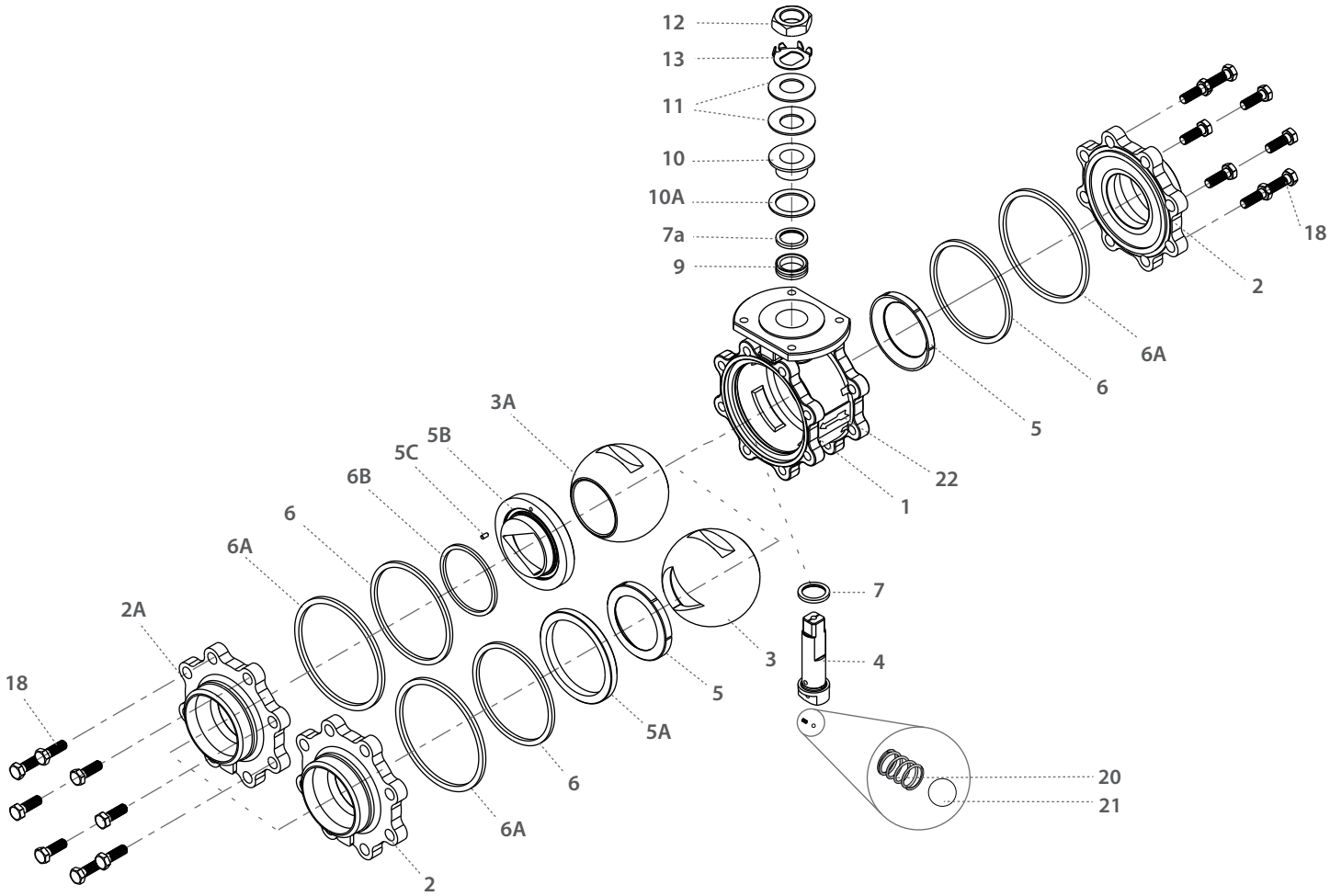

Item	Description	Material specification	Qty.
1	Body	Acc. Ordering Code	1
2	End	Acc. Ordering Code	1-2
2A	V-End	Acc. Ordering Code	1
3	V-Ball	Acc. Ordering Code	1
3A	Ball	Acc. Ordering Code	1
4	Stem	Acc. Ordering Code	1
5*	Seat	Acc. Ordering Code	1-2
5A	Seat Support	S. Steel	1
5B	V Seat	Acc. Ordering Code	1
5C	Dowel Pin	S. Steel	1
6*	Body Seal	Acc. Ordering Code	2
6A	Outer Seal	Acc. Ordering Code	2
6B	Seat Seal	Acc. Ordering Code	1

Item	Description	Material specification	Qty.
7*	Stem Thrust Seal	PEEK, CF PEEK, PCTFE	1
7a*	Anti-Abrasion Ring	PEEK, CF PEEK, PCTFE	1
9*	Stem Seal	CF PTFE, TFM	1
10	Follower	S. Steel	1
10A*	Slide Bearing	S. Steel	1
11	Disc Spring	S. Steel	2
12	Stem Nut	S. Steel	1
13	Tab Lock Washer	S. Steel	1
18	Body Bolts	S. Steel	16
20	Anti-Static Spring	S. Steel	2
21	Anti-Static Plunger	S. Steel	2
22	Arrow Flow	S. Steel	1
23	Tag (not shown)	S. Steel	1

* Maintenance Kit Component

Face To Face Sizes

Valve Size	Unit	B		A-XBW / ETI / ETD		A-ETO	A-Flanged CLASS 150 FTF CLASS 300		A-Flanged CLASS 300 FTF CLASS 300		A-Flanged CLASS 600 FTF CLASS 600		A-Flanged DIN PN16-PN100		A-TC
		Std. port	Full port	Std. port	Full port	Std. port	Std. port	Full port	Std. port	Full port	Std. port	Full port	Std. port	Full port	Full port
DN10	mm	20.6	20.6	140.6	143	108.6									
⅜"	inch	0.8	0.8	5.5	5.6	4.3									
DN15	mm	20.6	24.6	140.6	147.0	137.0	140.0	140.0	140.0	140.0	165.0	140.0*	130.0	130.0	88.8
½"	inch	0.8	1.0	5.5	5.8	5.4	5.5	5.5	5.5	5.5	6.5	5.5*	5.1	5.1	3.5
DN20	mm	24.6	31.7	147.0	168.7	147.0	152.0	152.0	152.0	152.0	152.0*	152.0*	150.0	150.0	101.6
¾"	inch	1.0	1.2	5.8	6.6	5.8	6.0	6.0	6.0	6.0	6.0*	6.0*	5.9	5.9	4.0
DN25	mm	31.7	41.3	168.7	179.3	164.1	165.1	165.1	165.1	165.1	216.0	165.1*	160.0	160.0	114.3
1"	inch	1.2	1.6	6.6	7.1	6.5	6.5	6.5	6.5	6.5	8.5	6.5*	6.3	6.3	4.5
DN32	mm	41.3	48.4	179.3	189.4	179.3	178.1	178.1	178.1	178.1	178.1*	178.1*	180.0	180.0	
1¼"	inch	1.6	1.9	7.1	7.5	7.1	7.0	7.0	7.0	7.0	7.0*	7.0*	7.1	7.1	
DN40	mm	48.4	56.3	189.4	200.3	184.0	190.0	190.0	190.0	190.0	241.0	190.0*	200.0	200	139.8
1½"	inch	1.9	2.2	7.5	7.9	7.2	7.5	7.5	7.5	7.5	9.5	7.5*	7.9	7.9	5.5
DN50	mm	56.3	72.6	200.3	232.6	193.5	216.1	216.1	216.1	216.1	292.0	216.1*	230.0	230.0	158.9
2"	inch	2.2	2.9	7.9	9.2	7.6	8.5	8.5	8.5	8.5	11.5	8.5*	9.0	9.0	6.3
DN65	mm	72.6	83.4	232.6	283.4	222.6	241.0	241.0	241.0	241.0	241.0*	330.0	230.0	270.0	213
2½"	inch	2.9	3.3	9.2	11.2	8.8	9.5	9.5	9.5	9.5	9.5*	13.0	9.1	10.6	8.4
DN80	mm	83.4	108.8	283.4	348.8	250.4	282.0	282.0	282.0	282.0	356.0	356.0	280.0	310.0	215.8
3"	inch	3.3	4.3	11.2	13.7	9.9	11.1	11.1	11.1	11.1	14.0	14.0	11.0	12.2	8.5
DN100	mm	108.8	123.0	348.8	390.0	348.8	305.0	305.0	305.0	305.0	432.0	432.0	350.0	350.0	245.4
4"	inch	4.3	4.8	13.7	15.4	13.7	12.0	12.0	12.0	12.0	17.0	17.0	13.78	13.78	9.7
DN150	mm	146.1	180	444.1	180.0	444.1	403.1	403.1	403.1	403.1	559.0	559.0	350.0	480.0	146.1
6"	inch	5.8	7.1	17.5	7.1	17.5	15.9	15.9	15.9	15.9	22.0	22.0	13.78	18.9	5.8

* Comply with class 300 FTF

XBW / ETO / ETI / ETD

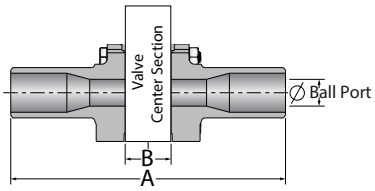

Flanged

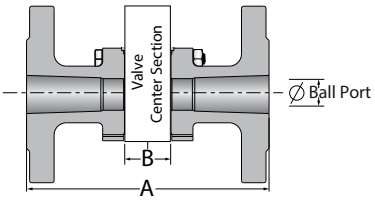

TC

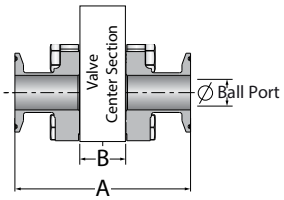

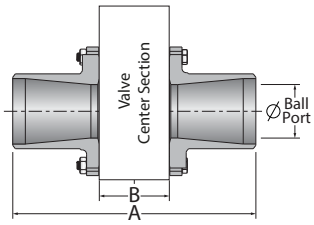

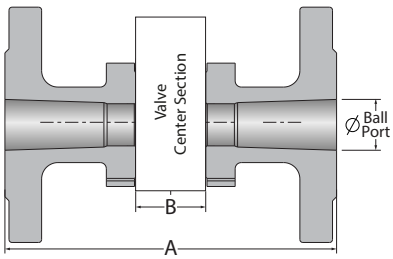

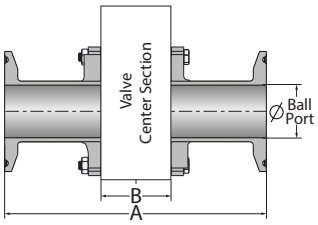

Control Floating Ball 3 Piece - Ordering Code System

"Mandatory option" options are marked with green background | "Standard offer" options are marked with light green background

1	2	3	4	5	6	7	8	9	10	11	12	13	14	15	16	17	18	19	20	21	22	23	24	...	28	29	30
4	0			F	N	4	7	W	-	6	M	6	M	A	T	S	/	B	W			-	S	0	8	-	
Size	Features					Series		Design		Body material	Ends material	Ball/Stem material		Seat material	Inner Seal	Outer Seal		End Connection					Control Feature				Special features

Size (1-2)		
Code	inch	mm
02	¼"	8
03	⅜"	10
05	½"	15
07	¾"	20
10	1"	25
12	1¼"	32
15	1½"	40
20	2"	50
25	2½"	65
30	3"	80
40	4"	100

Features (3-6)	
N	Control valve
F	Fire safe
B	Full port
O	Oxygen service
C	Cryogenic [R]
Z	High Temp. (MTM) [R]
H*	Hydrogen Service

* for material selection - see Hydrogen Service chapter

Series (7-8)	
47	Floating ball 3 piece

Design (9)	
W	Total HermetiX Integrity package
G	Total HermetiX Integrity package - FDA compliant

Body material (11) [R]
Per base series

Ends material (12) [R]
Per base series

Ball material (13)	
6*	S. SteelCF8M/CF3M
W**	Hastelloy-C22
S**	254SMO
D**	Duplex
K**	Super Duplex
7**	Monel
A**	Alloy-20
C**	Hastelloy-C276

* V-port must use St. St. St. St. is optional for V-ball
** V-ball only

Stem Material (14)	
M	High Strength S. Steel
6	S. Steel316L
Z	Inconel 718
W	Alloy-C22
S	254SMO A479
A	Alloy-20
D	Duplex A479
K	Super Duplex A479
7	Monel
C	Hastelloy-C276

Seat material (15)	
P	CF PTFE
K	CF PEEK
A	TFM

Inner Seal material (16) [R]
Per base series

Outer Seal material (17) [R]
Per base series

End connections (19-23) [R]
Per base series

Control Feature (24-28)	
V-Port	
S08*	0.8mm Slot on downstream seat
S16*	1.6mm Slot on downstream seat
S32*	3.2mm Slot on downstream seat
V30	V30° Shape on downstream seat
V60	V60° Shape on downstream seat
V90	V90° Shape on downstream seat

* Up to 1"

V-Ball	
SB08*	0.8mm Slot on ball
SB16*	1.6mm Slot on ball
SB32*	3.2mm Slot on ball
VB30	V30° Shape on ball
VB60	V60° Shape on ball
VB90	V90° Shape on ball

* Up to 1"

Hardening	
I	Cr3C2 - Chromium Carbide with Nickel Chrome binder - HVOF technique
O	WC-Co - Tungsten Carbide with Cobalt binder - HVOF technique

Special Features (30-...) [R]	
SRS	Self Relief Seat
B	Body made from barstock
EP	Electropolished
J2N05	Jacketed valve - number of ports(2), type(NPT) and size(½")

Valve Special Stem Seals
Per base series

[R]:
- For Cryogenic CNxx valve see options in Cryogenic chapter.
- For High Temp. (MTM) ZNxx valve see options in High Temp. (MTM) chapter.

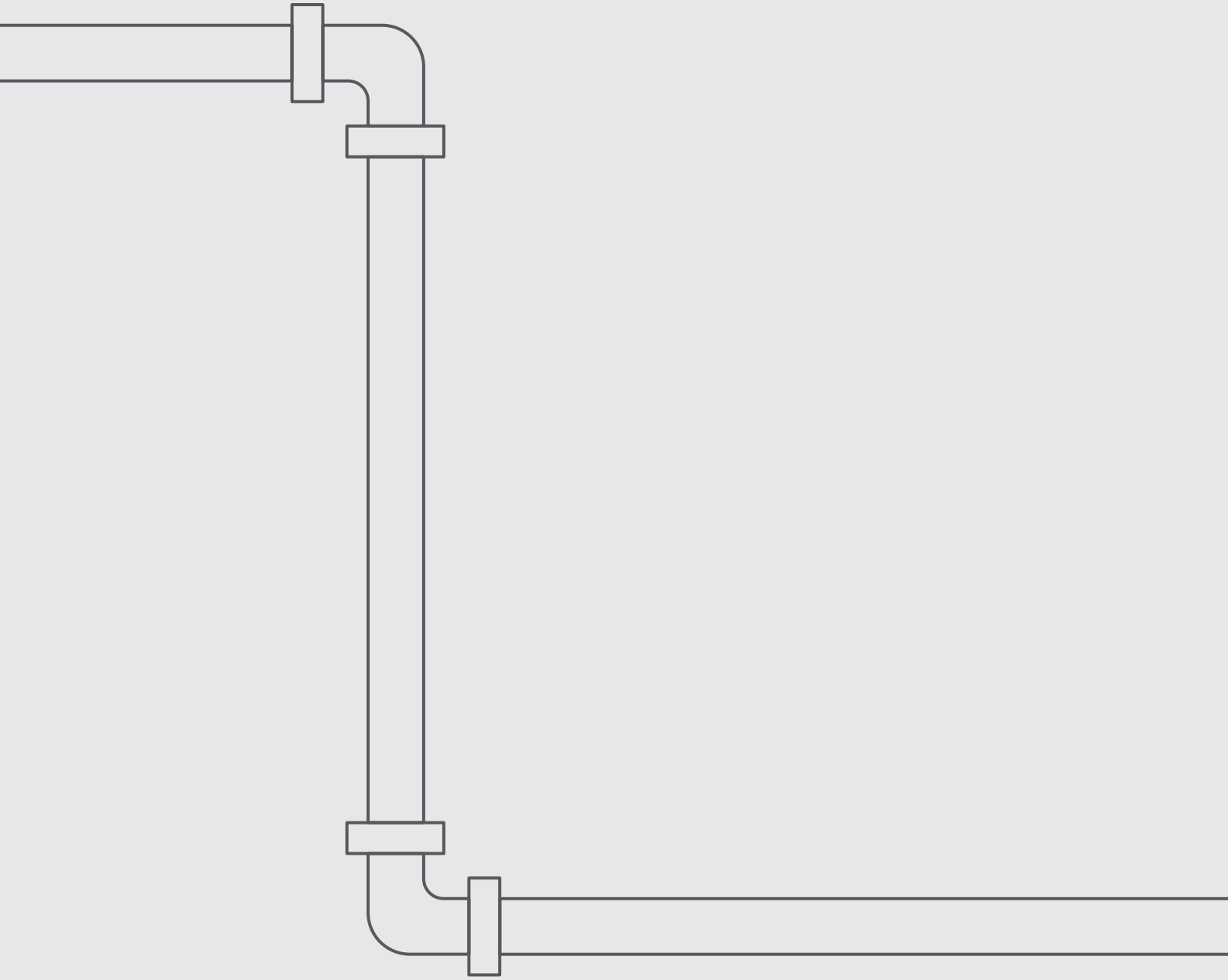

N31 N32 N73 N74 N77 N78

Control Valves

FLOATING BALL

FLANGED

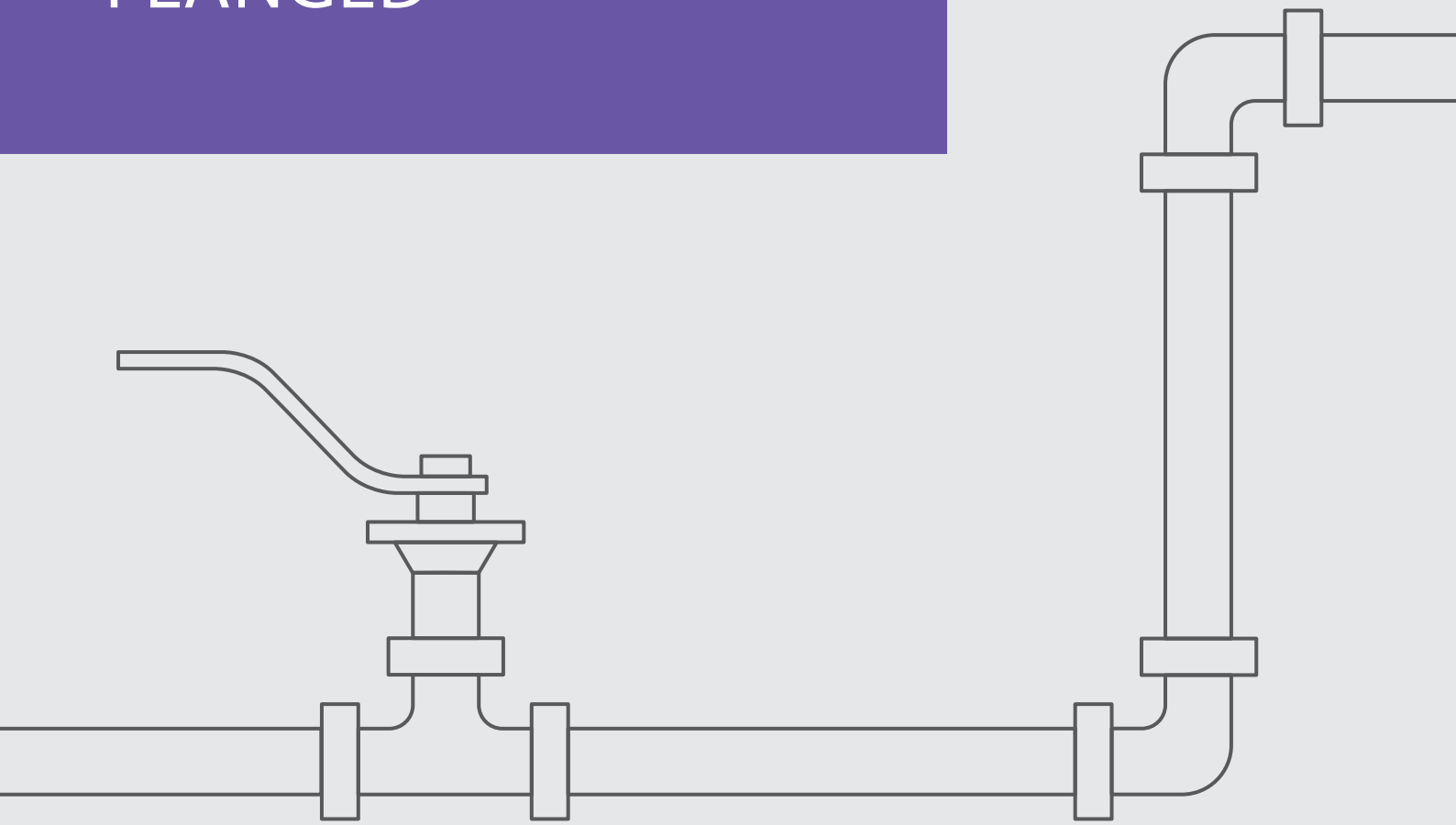

Control Flanged Floating Ball

Valve Dimensions

V Port

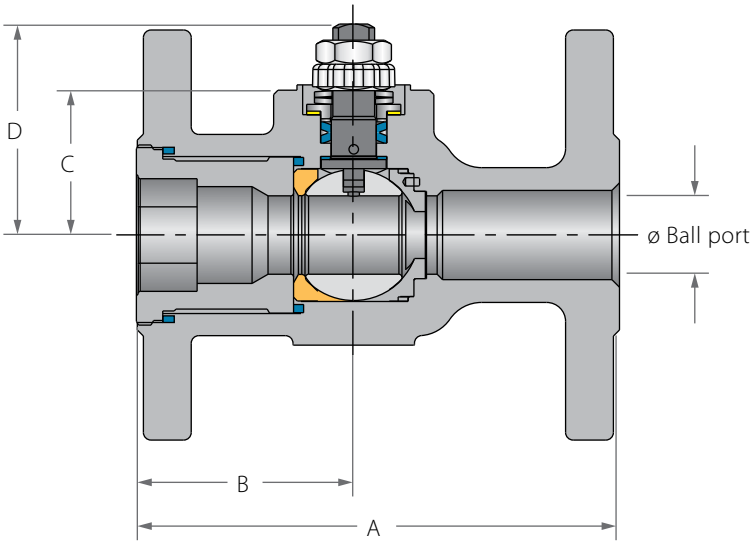

V Ball

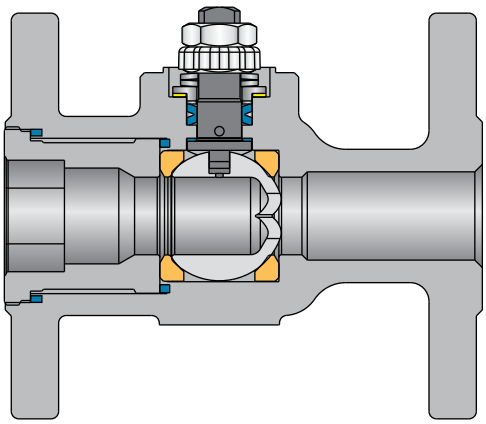

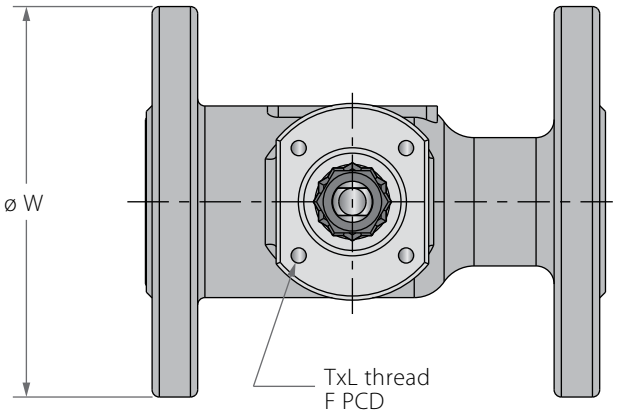

Preparation for actuation

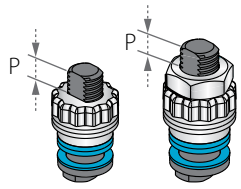

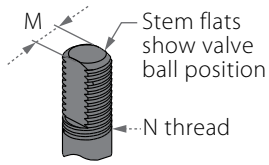

Std. port	Unit	Ball port	A		B	C	D	W		M	N	P	F		TxL	Weight kg/lb	
			150	300				150	300							150	300
DN15	mm	11.15	108.0	140.0	46.0	29.0	38.0	88.90	95.25	5.54	⅜" UNF	6.65	F03	36.0	M5x10	1.70	2.40
½"	inch	0.44	4.25	5.50	1.81	1.14	1.50	3.50	3.75	0.22		0.26		1.42		3.80	5.30
DN20	mm	14.30	117.0	152.0	49.0	31.40	40.30	98.55	163.07	5.54	⅜" UNF	6.65	F03	36.0	M5x10	2.30	3.30
¾"	inch	0.56	4.61	6.0	1.93	1.24	1.59	3.88	6.42	0.22		0.26		1.42		5.10	7.30
DN25	mm	20.60	127.0	165.0	57.0	38.20	55.60	107.95	123.95	7.54	7/16" UNF	7.40	F04	42.0	M5x10	3.10	4.60
1"	inch	0.81	5.0	6.50	2.25	1.50	2.19	4.25	4.88	0.30		0.29		1.65		7.30	10.20
DN40	mm	31.80	165.0	190.0	62.0	43.60	73.10	127.0	155.52	8.71	7/16" UNF	8.50	F05	50.0	M6x12	5.50	8.70
1½"	inch	1.25	6.50	7.50	2.44	1.72	2.88	5.0	6.10	0.34		0.33		1.97		12.20	19.30
DN50	mm	38.20	178.0	216.0	68.0	48.30	77.80	152.40	165.10	8.71	9/16" UNF	8.50	F05	50.0	M6x12	8.10	10.80
2"	inch	1.50	7.0	8.50	2.67	1.90	3.06	6.0	6.50	0.34		0.33		1.97		18.00	24.00

Control Flanged Floating Ball

Components & Materials

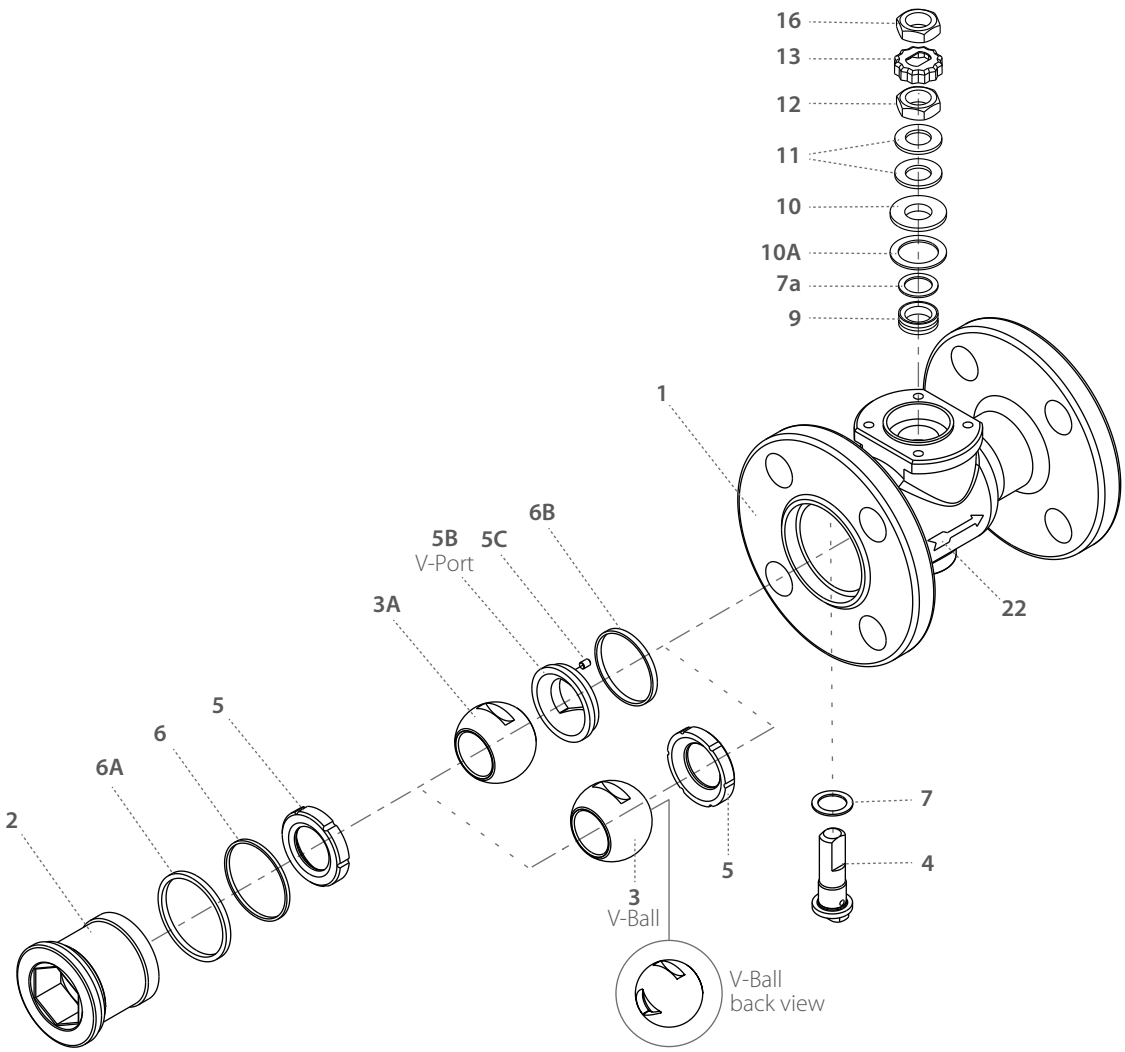

Item	Description	Material specification	Qty.
1	Body	Acc. Ordering Code	1
2	Plug	Acc. Ordering Code	1
3	V Ball	Acc. Ordering Code	1
3A	Ball	Acc. Ordering Code	1
4	Stem	Acc. Ordering Code	1
5*	Seat	Acc. Ordering Code	1-2
5B	V Seat	Acc. Ordering Code	1
5C	Dowel Pin	S. Steel	1
6*	Body Seal	PTFE	1
6a*	Outer Seal	Acc. Ordering Code	1
6B*	Seat Seal	Acc. Ordering Code	1
7*	Stem Thrust Seal	PEEK, CF PEEK, PCTFE	1

Item	Description	Material specification	Qty.
7a*	Anti-Abrasion Ring	PEEK, CF PEEK, PCTFE	1
9*	Stem Seal	CF PTFE, TFM	1
10	Follower	S. Steel	1
10A*	Slide Bearing	S. Steel	1
11	Disc Spring	S. Steel	2
12	Stem Nut	S. Steel	1
13	Locking Clip	S. Steel	1
16	Handle Nut	S. Steel	1
22	Arrow Flow	S. Steel	1
23	Tag (not shown)	S. Steel	1

* Maintenance kit components

Control Flanged Floating Ball

Valve Dimensions

V Port

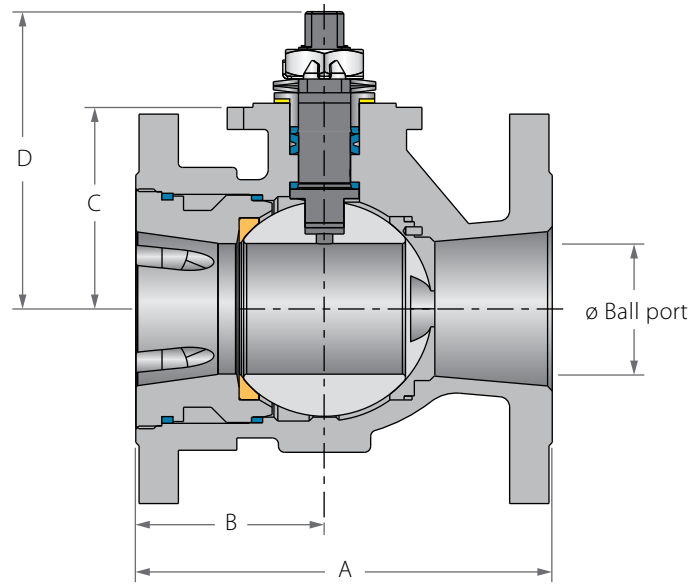

V Ball

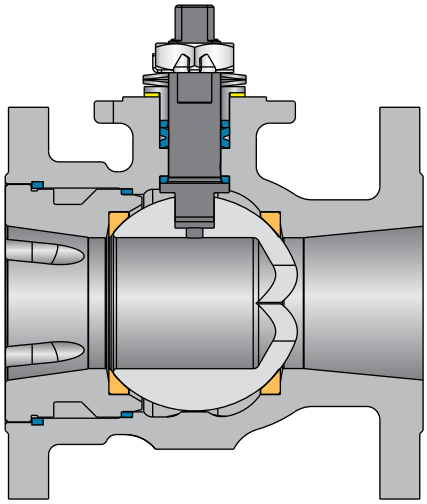

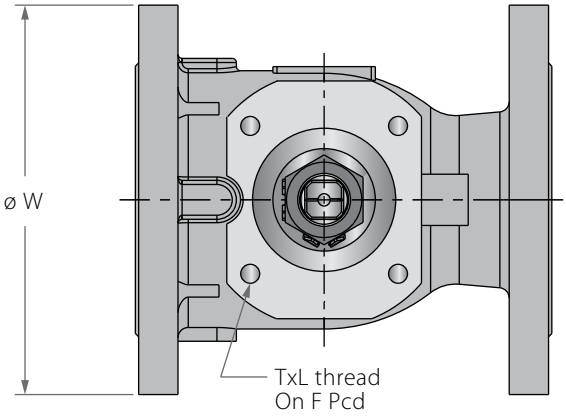

Preparation for actuation

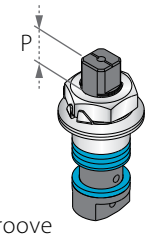

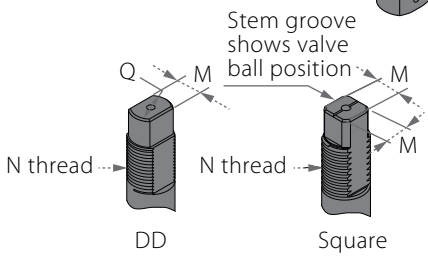

Std. port	Unit	Ball port	A		B	C	D	W		M	N	P	Q	F		TxL	Weight kg/lb	
			150	300				150	300								150	300
DN80	mm	63.50	203.0	284.0	92.0	98.40	145.0	190.50	209.55	18.90	1" - 14 UNS-2A	16.70	22.70	F10	102.0	M10x20	18.00	22.70
3"	inch	2.50	8.0	11.18	3.62	3.88	5.72	7.50	8.25	0.74		0.66	0.89		4.02		40.00	50.40
DN100	mm	82.60	229.0	305.0	102.0	114.10	161.0	228.60	254.0	18.90	1" - 14 UNS-2A	16.70	22.70	F10	102.0	M10x20	28.20	36.30
4"	inch	3.25	9.0	12.0	4.0	4.49	6.34	9.0	10.0	0.74		0.66	0.89		4.02		62.80	80.60
DN150	mm	111.10	267.0	403.20	108.0	157.40	226.0	279.40	317.50	28.45	1½" - 12 UNF-2A	26.20	35.20	F12	125.0	M12x20	41.00	69.00
6"	inch	4.38	10.50	15.88	4.25	6.20	8.91	11.0	12.50	1.12		1.03	1.39		4.92		91.00	153.00
DN200	mm	144.40	292.0	419.0	163.50	185.20	254.0	342.90	381.0	28.45	1½" - 12 UNF-2A	26.20	35.20	F12	125.0	M12x20	82.00	105.00
8"	inch	5.68	11.50	16.50	5.37	7.30	10.0	13.50	15.0	1.12		1.03	1.39		4.92		182.00	233.00

Control Flanged Floating Ball

Components & Materials

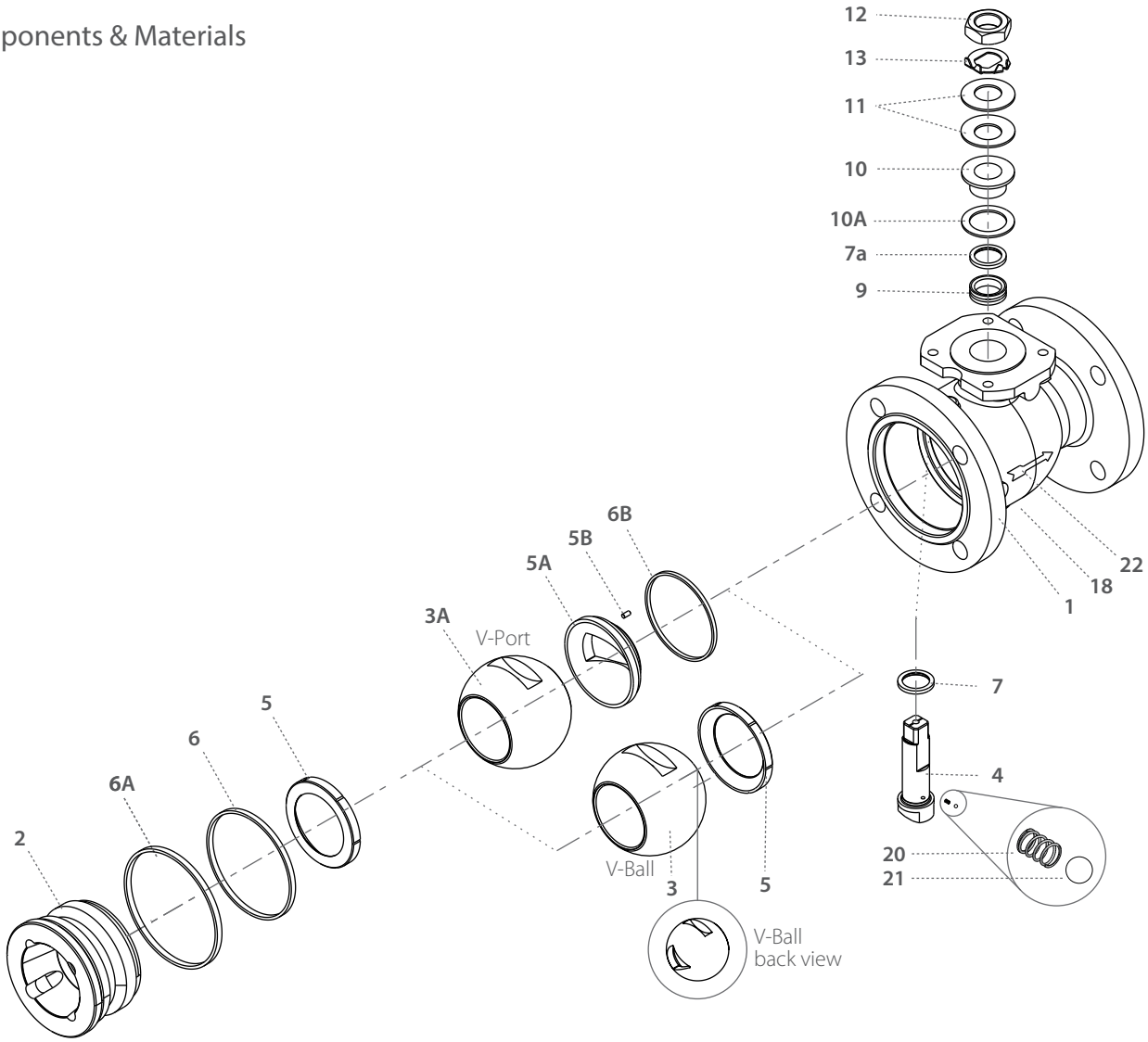

Item	Description	Material specification	Qty.
1	Body	Acc. Ordering Code	1
2	Plug	Acc. Ordering Code	1
3	V Ball	Acc. Ordering Code	1
3A	Ball	Acc. Ordering Code	1
4	Stem	Acc. Ordering Code	1
5*	Seat	Acc. Ordering Code	1-2
5A	V Seat	A479 316L	1
5B	Dowel Pin	Acc. Ordering Code	1
6*	Body Seal	PTFE	1
6A*	Outer Seal	Acc. Ordering Code	1
6B*	Seat Seal	Acc. Ordering Code	1

Item	Description	Material specification	Qty.
7*	Stem Thrust Seal	PEEK, CF PEEK, PCTFE	1
7a*	Anti-Abrasion Ring	PEEK, CF PEEK, PCTFE	1
9*	Stem Seal	CF PTFE, TFM	1
10	Follower	S. Steel	1
10A*	Slide Bearing	S. Steel	1
11	Disc Spring	S. Steel	2
12	Stem Nut	S. Steel	1
13	Tab Lock Washer	S. Steel	1
22	Arrow Flow	S. Steel	1
23	Tag (not shown)	S. Steel	1

* Maintenance kit components

Control Flanged Floating Ball

Valve Dimensions

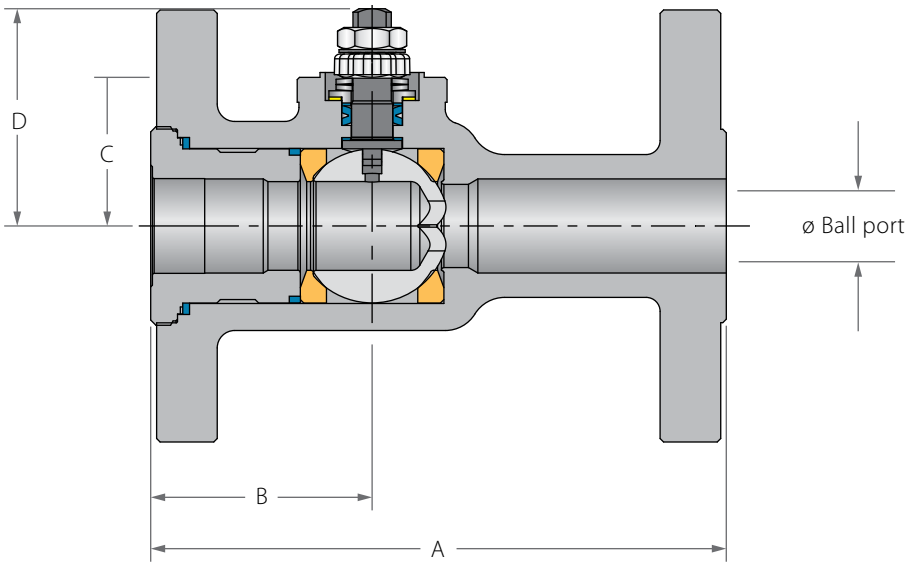

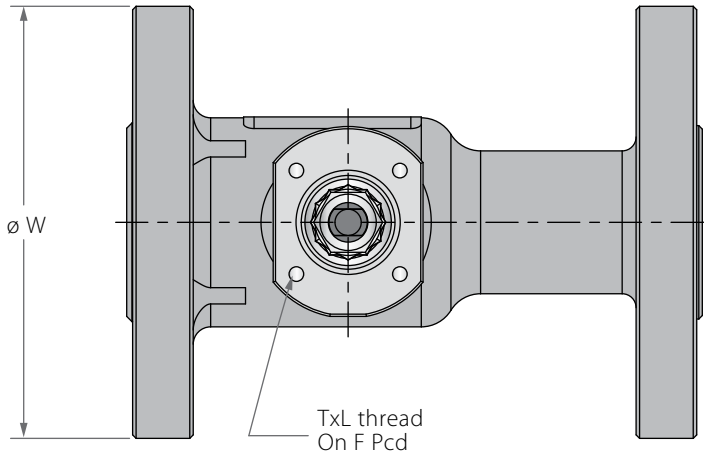

Preparation for actuation

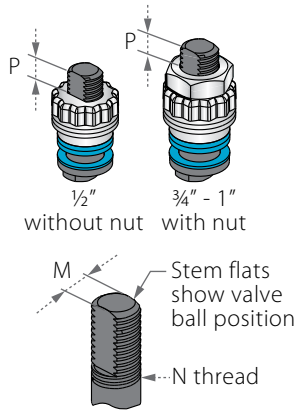

Std. port	Unit	Ball port	A		B	C	D	W		M	N	P	F		TxL	Weight kg/lb	
			150	300				150	300							150	300
DN15	mm	14.30	108.0	140.0	47.0	31.40	40.50	89.0	95.0	5.54	3/8" UNF	11.10	F03	36.0	M5x10	1.80	2.30
½"	inch	0.56	4.25	5.51	1.85	1.24	1.59	3.50	3.74	0.22		0.44		1.42		4.00	5.10
DN20	mm	20.60	117.0	152.0	57.0	38.20	55.60	98.0	117.0	7.54	7/16" UNF	15.40	F04	42.0	M5x10	2.20	3.30
¾"	inch	0.81	4.61	5.98	2.24	1.50	2.19	3.86	4.61	0.30		0.61		1.65		4.80	7.30
DN25	mm	25.40	127.0	165.0	62.0	42.70	60.30	108.0	124.0	7.54	7/16" UNF	15.40	F04	42.0	M5x10	3.20	4.60
1"	inch	1.0	5.0	6.50	2.44	1.68	2.37	4.25	4.88	0.30		0.61		1.65		7.00	10.10

Control Flanged Floating Ball

Components & Materials

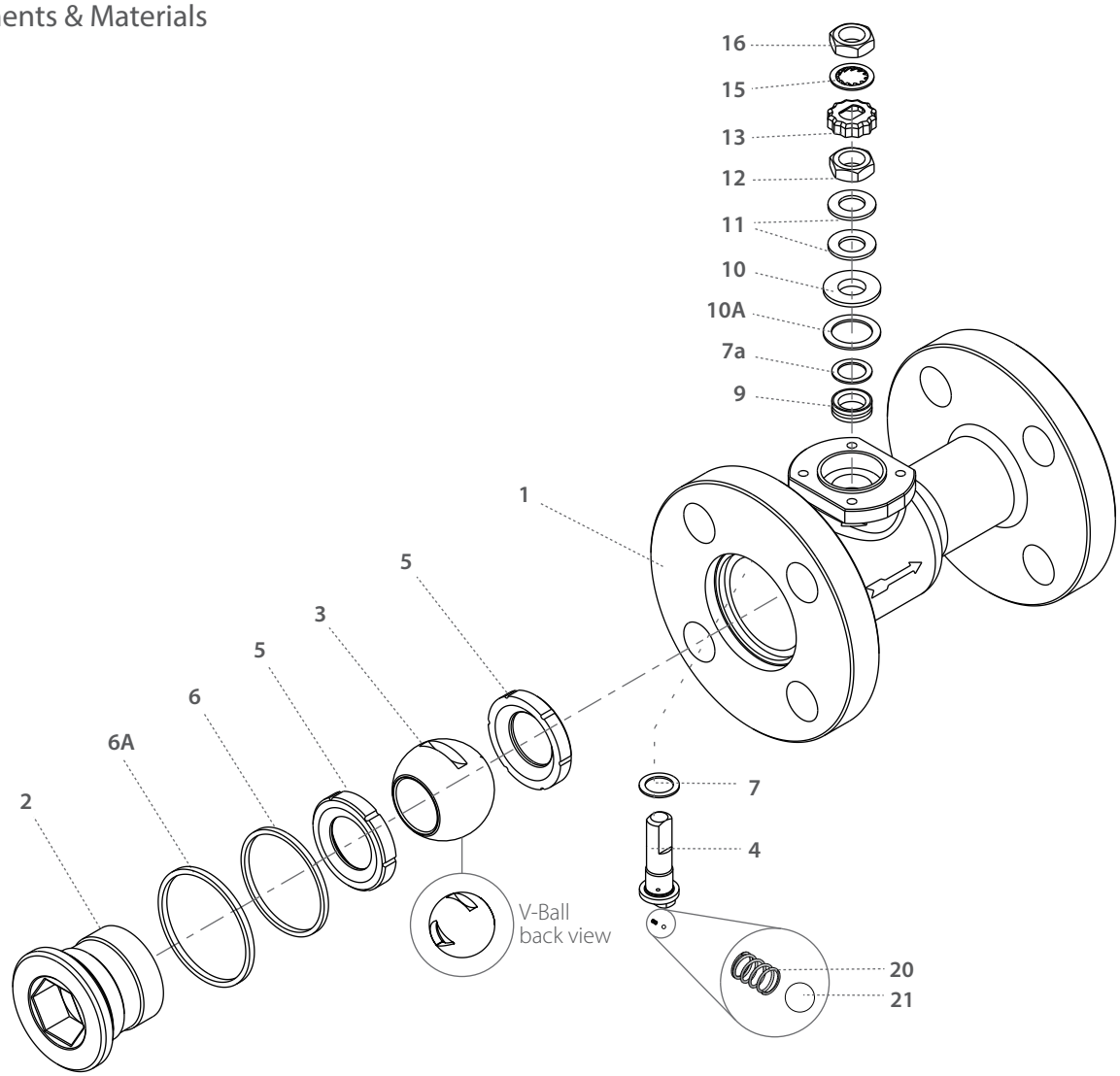

Item	Description	Material specification	Qty.
1	Body	Acc. Ordering Code	1
2	Insert	Acc. Ordering Code	1
3	V-Ball	Acc. Ordering Code	1
4	Stem	Acc. Ordering Code	1
5*	Seat	Acc. Ordering Code	2
6*	Body Seal	PTFE	1
6A*	Outer Seal	Acc. Ordering Code	1
7*	Stem Thrust Seal	CF PEEK, PCTFE, CF PTFE	1
7a*	Anti-Abrasion Ring	CF PEEK, PCTFE, CF PTFE	1
9*	Stem Seal	CF PTFE, TFM	1
10	Follower	S. Steel	1

Item	Description	Material specification	Qty.
10A*	Slide Bearing	S. Steel	1
11	Disc Spring	S. Steel	2
12	Stem Nut	S. Steel	1
13	Locking Clip	S. Steel	1
15	Serrated Washer	S. Steel	1
16	Handle Nut	S. Steel	1
20	Anti-Static Spring	S. Steel	1
21	Anti-Static Plunger	S. Steel	1
22	Arrow Flow	S. Steel	1
23	Tag (not shown)	S. Steel	1

* Maintenance Kit Component

Control Flanged Floating Ball

Valve Dimensions

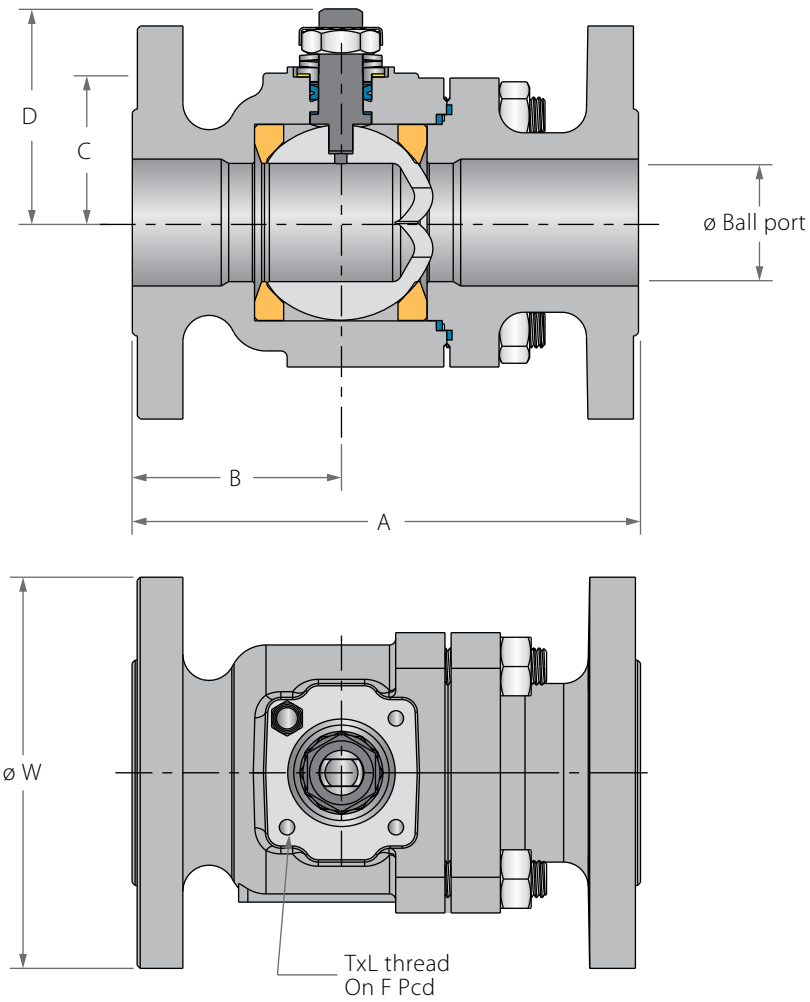

Preparation for actuation

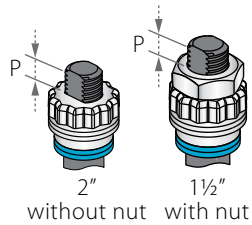

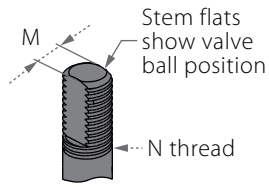

Std. port	Unit	Ball port	A		B		C	D	H	S	W		M	N	P	F		TxL	Weight kg/lb	
			150	300	150	300					150	300							150	300
DN32	mm	31.8	140.0	178.0	59.0	-	49.0	73.0	120.5	220.1	115.0	135.0	8.71	⅝" UNF	8.5	F05	50.0	M6x12	-	-
1¼"	inch	1.25	5.51	7.0	2.32	-	1.92	2.87	4.74	8.66	4.53	5.31	0.34		0.33		1.97		-	-
DN40	mm	38.1	165.0	190.0	97.0	110.0	48.30	77.8	124.0	220.1	127.0	156.0	8.71	⅝" UNF	8.5	F07	50.0	M6x12	6.6	9.8
1½"	inch	1.50	6.50	7.50	3.82	4.33	1.90	30.60	4.88	8.66	5.0	6.14	0.34		0.33		1.97		14.5	21.5
DN50	mm	50.0	178.0	216.0	109.0	141.0	70.0	88.0	134.2	220.1	152.0	165.0	8.71	⅝" UNF	13.5	F07	70.0	M8x12	13	15
2"	inch	2.0	7.0	8.50	4.29	5.55	2.75	3.46	5.28	8.66	5.98	6.50	0.34		0.53		2.75		28.6	33

Control Flanged Floating Ball

Components & Materials

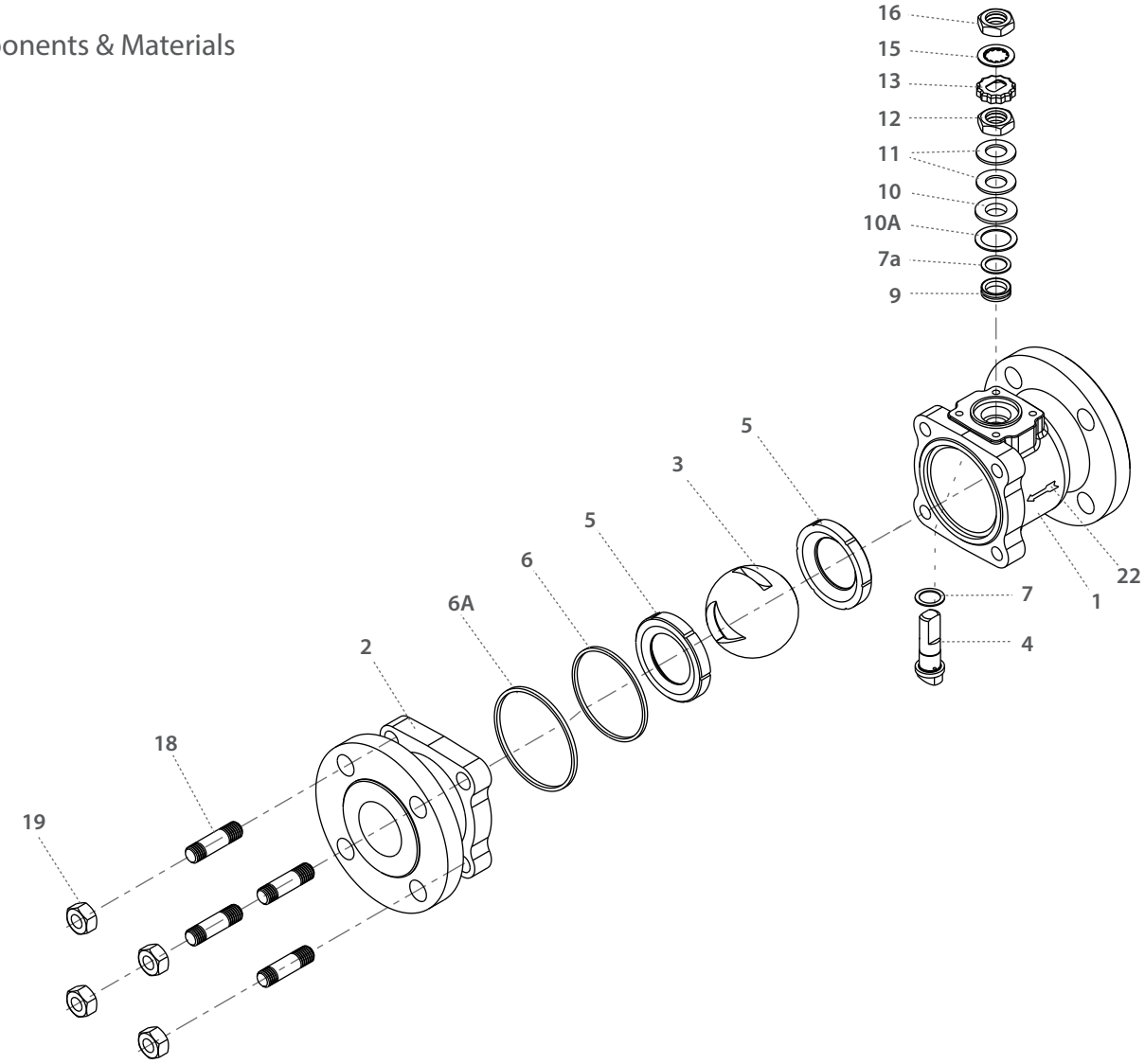

Item	Description	Material specification	Qty.
1	Body	Acc. Ordering Code	1
2	End	Acc. Ordering Code	1
3	V-Ball	Acc. Ordering Code	1
4	Stem	Acc. Ordering Code	1
5*	Seat	Acc. Ordering Code	2
6*	Body Seal	PTFE	1
6A*	Outer Seal	Acc. Ordering Code	1
7*	Stem Thrust Seal	CF PEEK, PCTFE, CF PTFE	1
7a*	Anti-Abrasion Ring	CF PEEK, PCTFE, CF PTFE	1
9*	Stem Seal	CF PTFE, TFM	1
10	Follower	S. Steel	1
10A*	Slide Bearing	S. Steel	1

Item	Description	Material specification	Qty.
11	Disc Spring	S. Steel	2
12	Stem Nut	S. Steel	1
13	Locking Clip	S. Steel	1
16	Handle Nut	S. Steel	1
18	Studs	S. Steel	4
19	Body Nuts	S. Steel	4
20	Anti-Static Spring	S. Steel	1
21	Anti-Static Plunger	S. Steel	1
22	Arrow Flow	S. Steel	1
23	Tag (not shown)	S. Steel	1

* Maintenance Kit Component

Control Flanged Floating Ball

Valve Dimensions

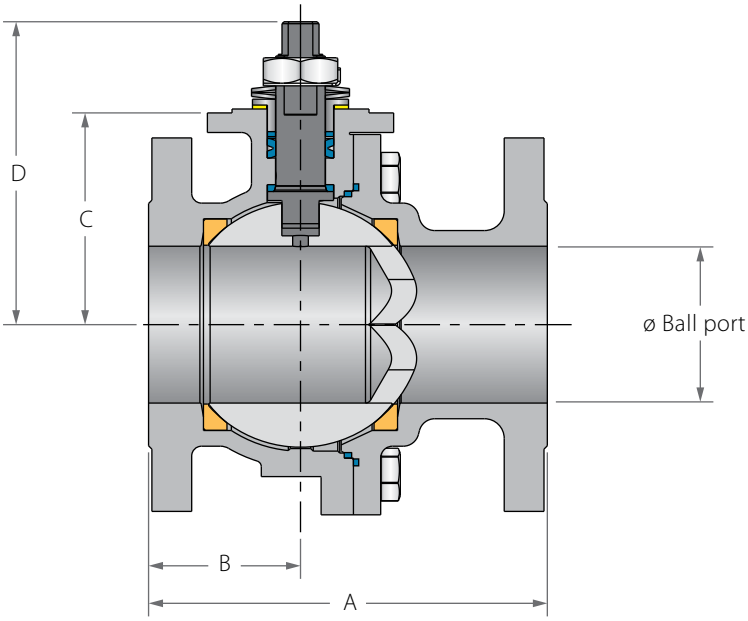

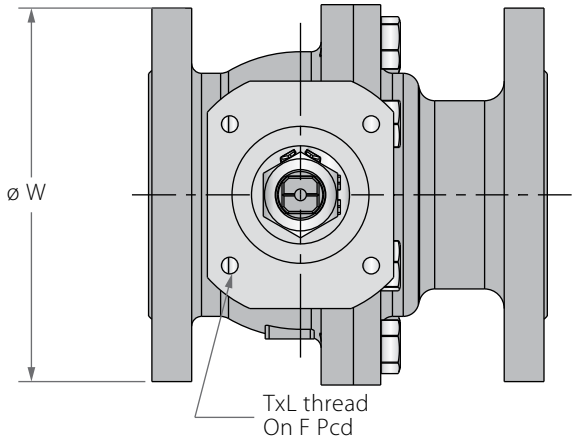

Preparation for actuation

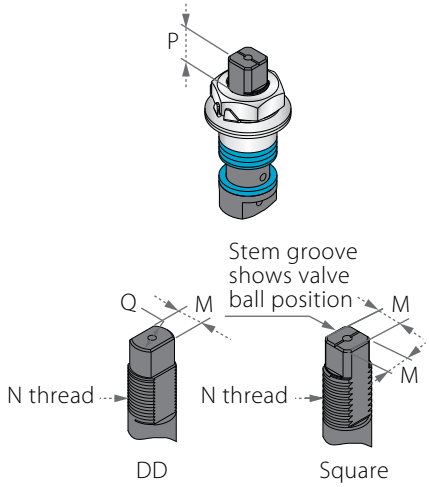

Std. port	Unit	Ball port	A		B		C	D	H	S	W		M	M-DO	N	P	Q	F		TxL	Weight kg/lb	
			150	300	150	300					150	300									150	300
DN80	mm	80.0	203.0	283.0	126.0	185.0	108.0	154.60	194.80	400.0	191.0	210.0	18.90	15.90	1" -14 UNF-2A	16.70	22.70	F10	102.0	M10x20	26	29
3"	inch	3.25	8.0	11.14	4.96	7.28	4.25	6.08	7.67	15.75	7.52	8.27	0.74	0.63		0.66	0.89		4.02		57	64
DN100	mm	100.0	229.0	305.0	144.0	200.0	124.0	170.60	211.0	610.0	230.0	254.0	18.90	15.90	1" -14 UNF-2A	16.70	22.70	F10	102.0	M10x20	34	39
4"	inch	3.94	9.0	12.01	5.67	7.87	4.88	6.71	8.31	24.0	9.06	10.0	0.74	0.63		0.66	0.89		4.02		75	86
DN150	mm	150.0	394.0	403.0	230.0	229.0	179.0	248.50	308.0	916.0	328.0	328.0	28.45	23.75	1¼" -12 UNF-1A	26.20	35.20	F12	125.0	M12x20	71	78
6"	inch	5.91	15.51	15.87	9.06	9.02	7.05	9.78	12.12	36.0	12.91	12.91	1.12	0.94		1.03	1.39		4.92		156	172
DN200	mm	200.0	457.20	403.50	215.0	261.0	241.0	353.70	-	-	450.0	450.0	35.92	35.92	2"-8 UN-2A	37.50	46.50	F14	140.0	M16x30	190	225
8"	inch	7.87	18.0	15.89	8.46	10.28	9.49	13.93	-	-	17.72	17.72	1.41	1.41		1.48	1.83		5.51		419	496

Control Flanged Floating Ball

Components & Materials

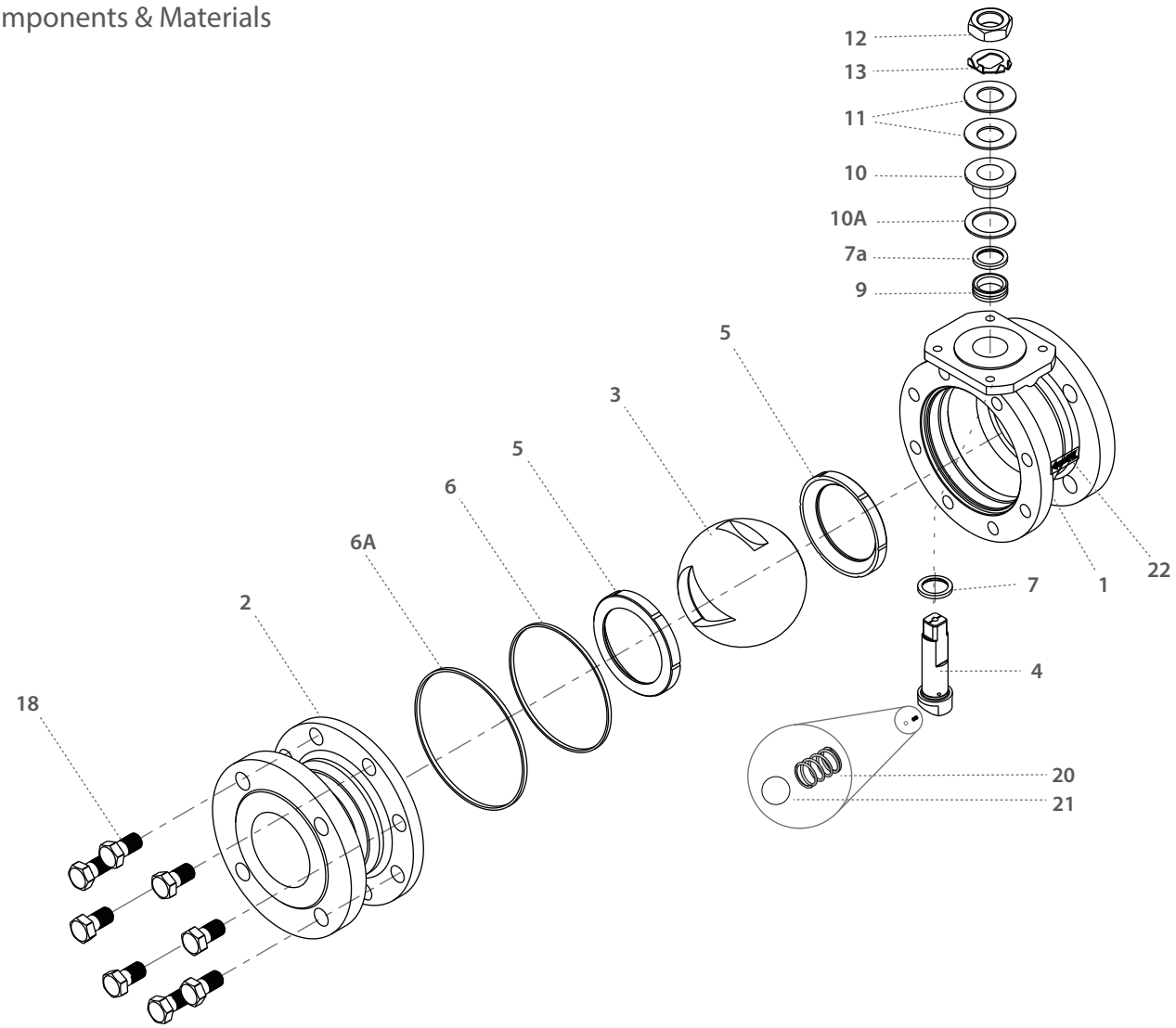

Item	Description	Material specification	Qty.
1	Body	Acc. Ordering Code	1
2	End	Acc. Ordering Code	1
3	V-Ball	Acc. Ordering Code	1
4	Stem	Acc. Ordering Code	1
5*	Seat	Acc. Ordering Code	2
6*	Body Seal	PTFE	1
6A*	Outer Seal	Acc. Ordering Code	1
7*	Stem Thrust Seal	CF PEEK, PCTFE, CF PTFE	1
7a*	Anti-Abrasion Ring	CF PEEK, PCTFE, CF PTFE	1
9*	Stem Seal	CF PTFE, TFM	1
10	Follower	S. Steel	1

Item	Description	Material specification	Qty.
10A	Slide Bearing	S. Steel	1
11	Disc Spring	S. Steel	2
12	Stem Nut	S. Steel	1
13	Tab Lock Washer	S. Steel	1
18	Bolt	S. Steel	8-12
20	Anti-Static Spring	S. Steel	1
21	Anti-Static Plunger	S. Steel	1
22	Arrow Flow	S. Steel	1
23	Tag (not shown)	S. Steel	1

* Maintenance Kit Component

Control Flanged Floating Ball

Valve Dimensions

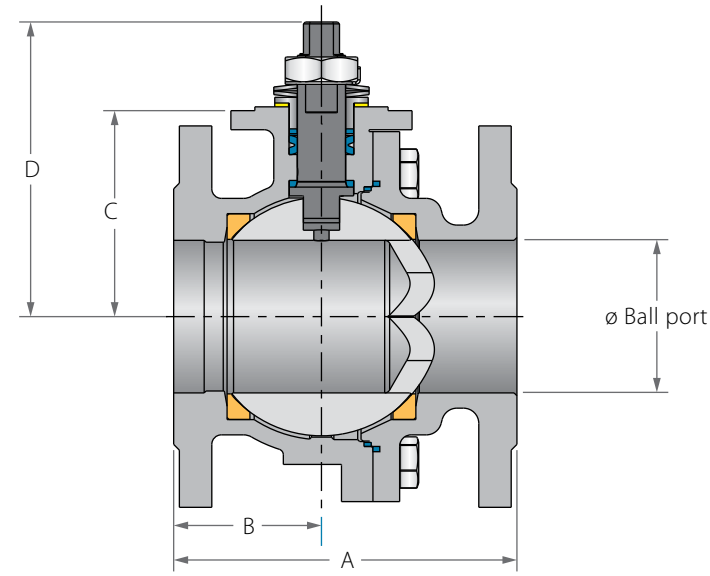

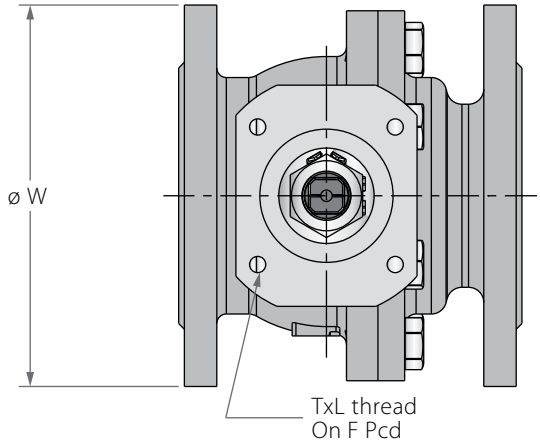

Preparation for actuation

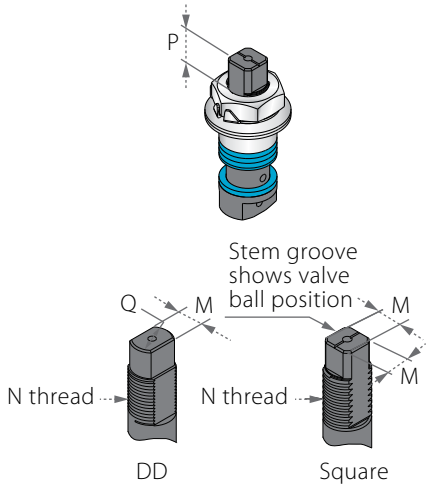

Std. port	Unit	Ball port	A		B		C	D	H	S	W	M	M-DD	N	P	F		TxL	Weight kg/lb	
			FS/F1	F4	16	40													F5	F4
DN80	mm	80.0	-	180.0	77.5	-	108.0	162.0	194.8	400.0	200.0	18.9	15.9	M24	22.70	F10	102.0	M10x20	-	24
3"	inch	3.20	-	7.09	3.05	-	4.25	6.40	7.67	15.75	7.87	0.74	0.63		0.89		4.02		-	52.8
DN100	mm	100.0	-	190.0	84.5	-	132.0	186.0	211.0	610.0	225.0	18.9	15.9	M24	22.70	F10	102.0	M10x20	-	30
4"	inch	3.94	-	7.48	3.33	-	5.20	7.32	8.31	24.02	8.86	0.74	0.63		0.89		4.02		-	66
DN150	mm	150.0	350.0	-	163.5	-	178.0	236.0	308.0	916.0	328.0	28.45	23.75	M35	35.20	F12	125.0	M12x20	63	-
6"	inch	5.91	13.78	-	6.44	-	7.01	9.29	12.13	36.06	12.91	1.12	0.94		1.03		4.92		139	-

Control Flanged Floating Ball

Components & Materials

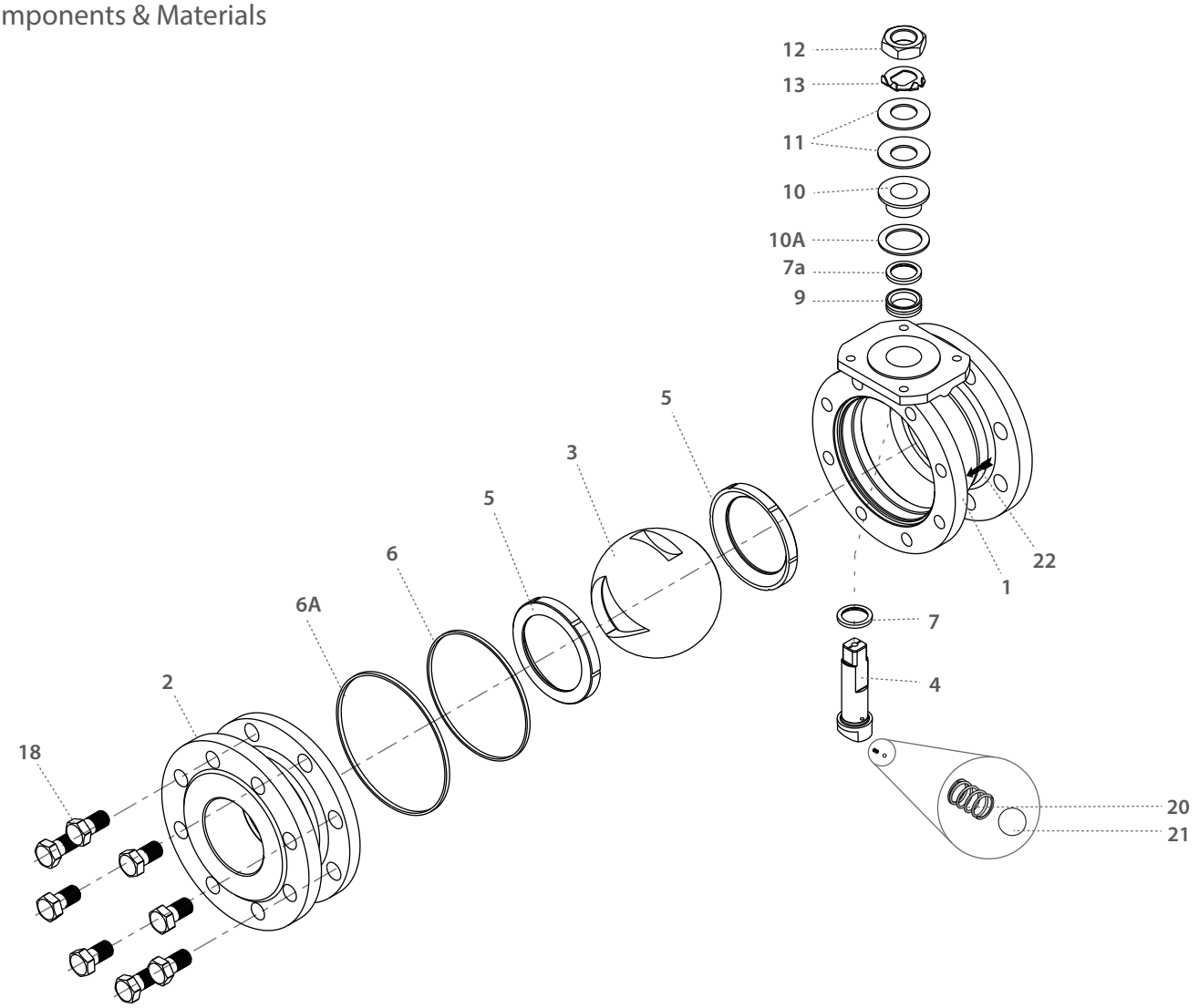

Item	Description	Material specification	Qty.
1	Body	Acc. Ordering Code	1
2	End	Acc. Ordering Code	1
3	V-Ball	Acc. Ordering Code	1
4	Stem	Acc. Ordering Code	1
5*	Seat	Acc. Ordering Code	2
6*	Body Seal	PTFE	1
6A*	Outer Seal	Acc. Ordering Code	1
7*	Stem Thrust Seal	PEEK, CF PEEK, PCTFE, CF PTFE	1
7a*	Anti-Abrasion Ring	PEEK, CF PEEK, PCTFE, CF PTFE	1
9*	Stem Seal	CF PTFE, TFM	1
10	Follower	S. Steel	1

Item	Description	Material specification	Qty.
10A	Slide Bearing	S. Steel	1
11	Disc Spring	S. Steel	2
12	Stem Nut	S. Steel	1
13	Tab Lock Washer	S. Steel	1
18	Body Bolts	S. Steel	8-10
20	Anti-Static Spring	S. Steel	1
21	Anti-Static Plunger	S. Steel	1
22	Arrow Flow	S. Steel	1
23	Tag (not shown)	S. Steel	1

* Maintenance kit components

Control Flanged Floating Ball

Valve Dimensions

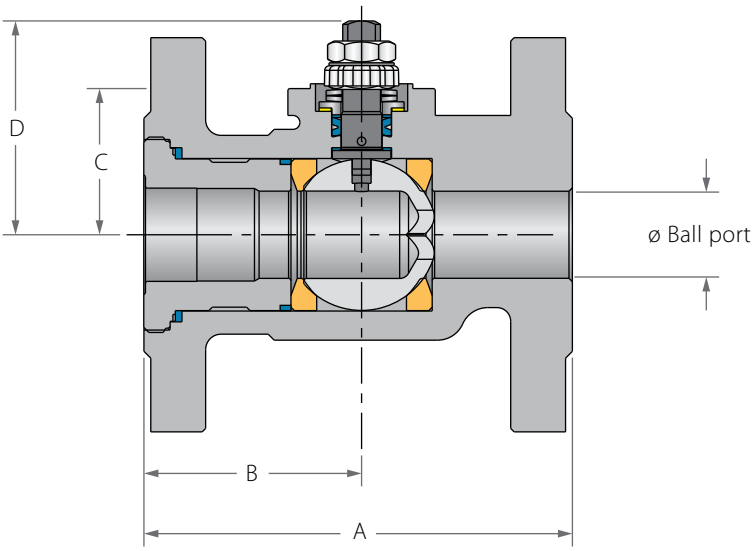

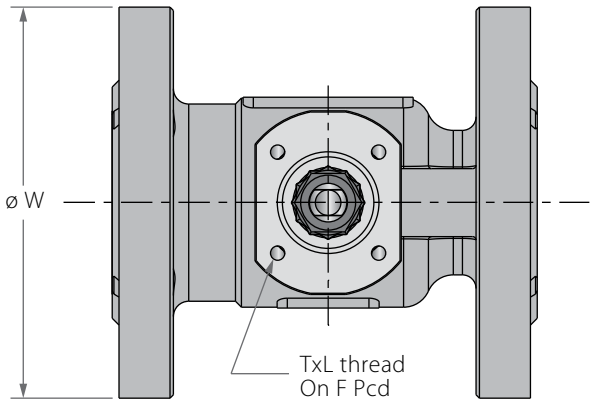

Preparation for actuation

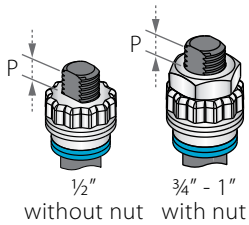

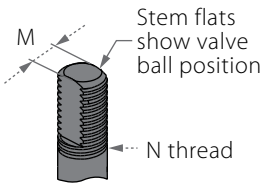

Std. port	Unit	Ball port	A		B	C	D	W	M	N	P	Q	F		TxL	Weight kg/lb	
			F1	F4												F1	F4
DN15	mm	14.30	130.0	115.0	48.0	31.50	40.50	5.54	5.54	1"-14 UNF-2A	6.65	95.0	F03	36.0	M5x10	2.2	2.1
½"	inch	0.56	5.12	4.53	1.89	1.24	1.59	0.22	0.22		0.26	3.74		1.42		4.80	4.60
DN20	mm	20.60	150.0	120.0	58.0	38.30	56.50	7.54	7.54	1"-14 UNF-2A	7.40	105.0	F04	42.0	M5x10	3.2	3
¾"	inch	0.81	5.91	4.72	2.28	1.51	2.22	0.30	0.30		0.29	4.13		1.65		7.00	6.60
DN25	mm	25.40	160.0	125.0	63.50	41.80	61.0	7.54	7.54	1"-14 UNF-2A	7.40	115.0	F04	42.0	M5x10	4.2	4
1"	inch	1.0	6.30	4.92	2.50	1.65	2.40	0.30	0.30		0.29	4.53		1.65		9.20	8.8

Control Flanged Floating Ball

Components & Materials

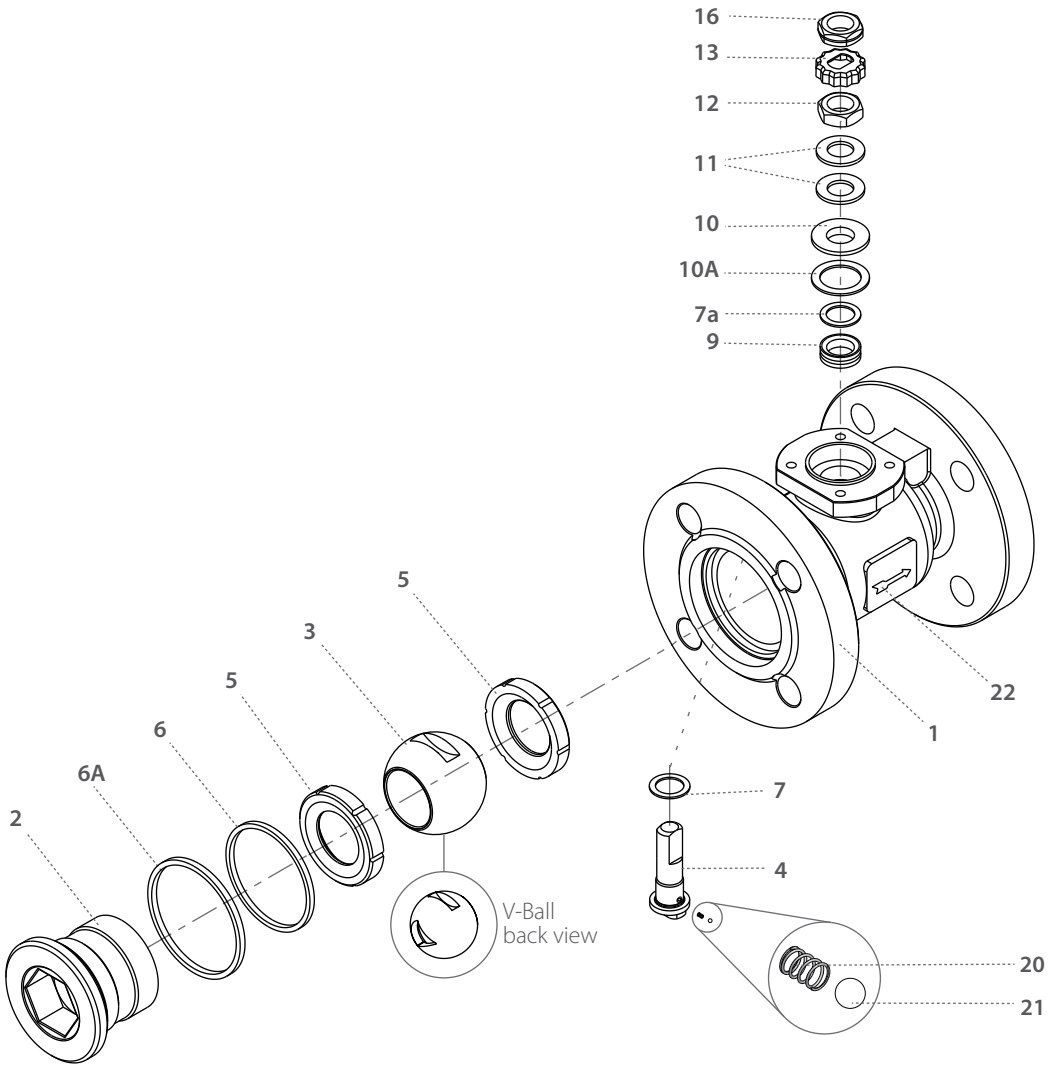

Item	Description	Material specification	Qty.
1	Body	Acc. Ordering Code	1
2	End	Acc. Ordering Code	1
3	Ball	Acc. Ordering Code	1
4	Stem	Acc. Ordering Code	1
5*	Seat	Acc. Ordering Code	2
6*	Body Seal	PTFE	1
6A*	Outer Seal	Acc. Ordering Code	1
7	Stem Thrust Seal	CF PEEK, PCTFE, CF PTFE	1
7a*	Anti-Abrasion Ring	CF PEEK, PCTFE, CF PTFE	1
9*	Stem Seal	CF PTFE, TFM	1
10	Follower	S. Steel	1

Item	Description	Material specification	Qty.
10A*	Slide Bearing	S. Steel	1
11	Disc Spring	S. Steel	2
12	Stem Nut	S. Steel	1
13	Locking Clip	S. Steel	1
16	Handle Nut	S. Steel	1
20	Anti-Static Spring	S. Steel	1
21	Anti-Static Plunger	S. Steel	1
22	Arrow Flow	S. Steel	2
23	Tag (not shown)	S. Steel	1

* Maintenance kit components

Control Flanged Floating Ball

Valve Dimensions

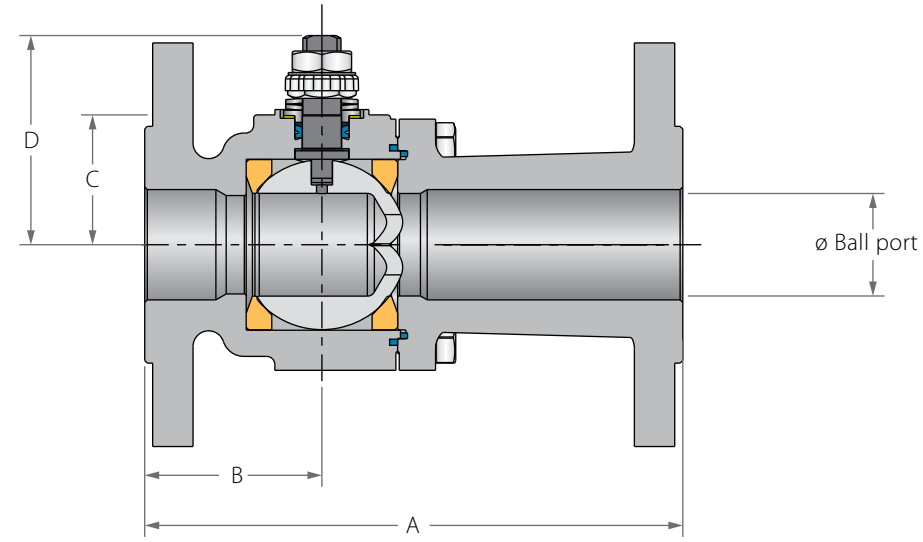

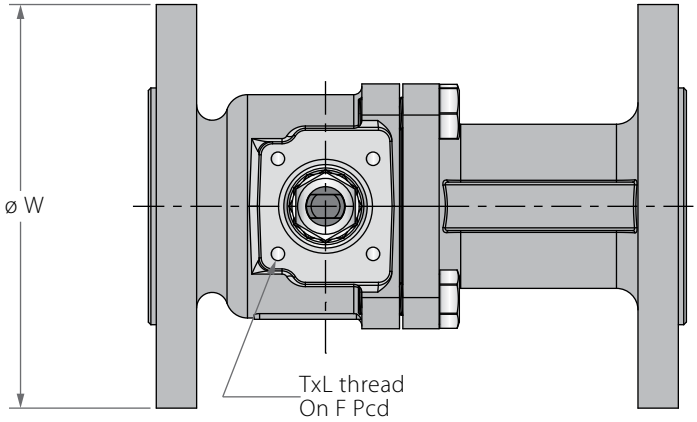

Preparation for actuation

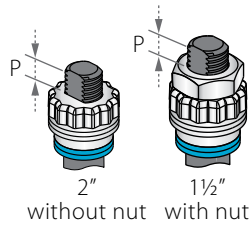

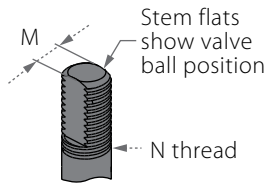

Std. port	Unit	Ball port	A		B		C	D	H	S	W		M	M-DD	N	P	F		TxL	Weight kg/lb		Kv
			150	300	150	300					150	300								150	300	Cv
DN65	mm	65.0	190.0	241.0	83.0	-	119.0	165.5	194.8	400.0	180.0	190.0	18.9	15.9	1"-14 UNS-2A	16.7	F10	102.0	M10x20	-	-	-
2½"	inch	2.56	7.48	9.48	3.26	-	4.76	6.51	7.67	15.75	7.08	7.48	0.74	0.63		0.66		4.02		-	-	-

Control Flanged Floating Ball

Components & Materials

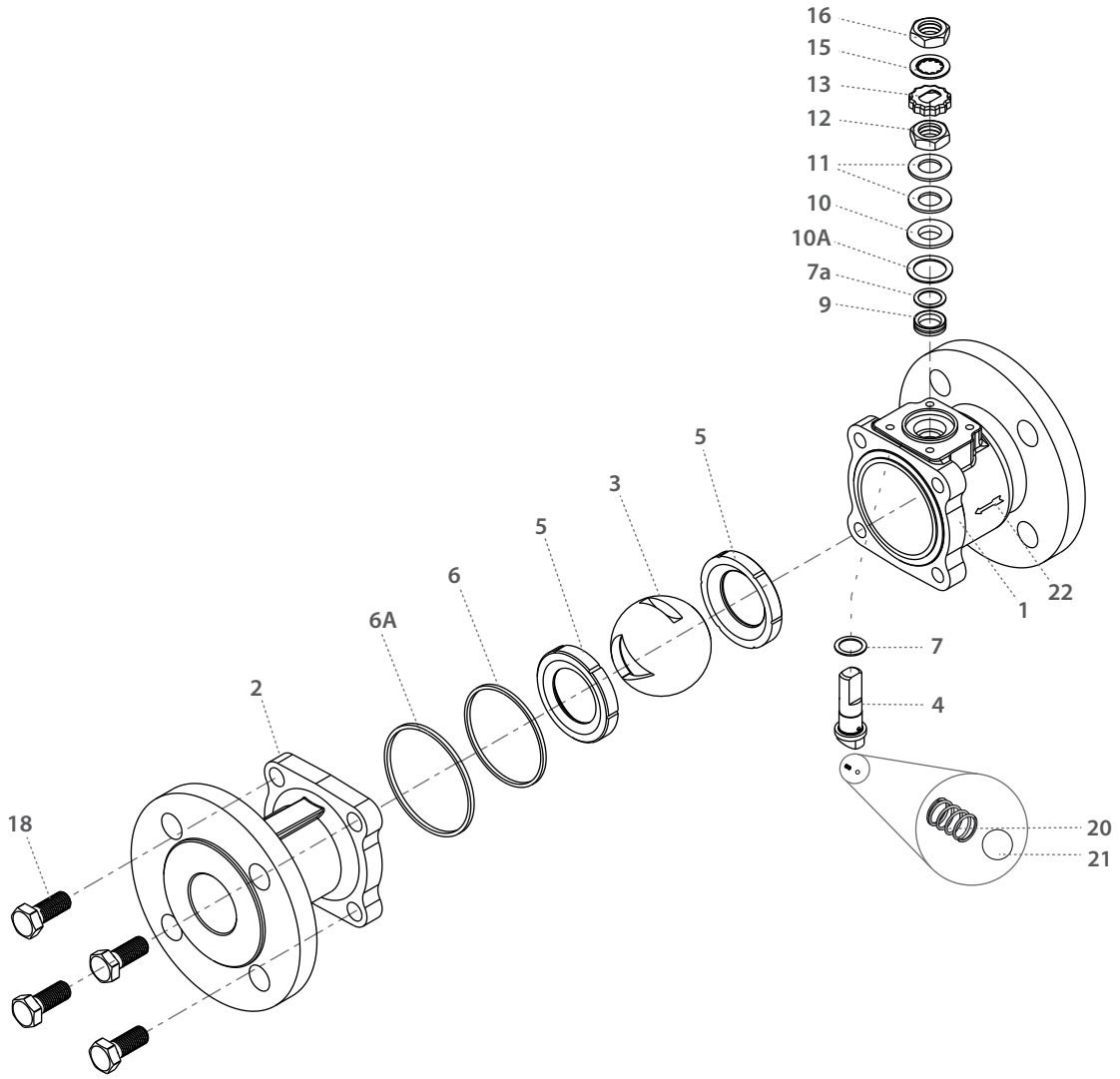

Item	Description	Material specification	Qty.
1	Body	Acc. Ordering Code	1
2	End	Acc. Ordering Code	1
3	V-Ball	Acc. Ordering Code	1
4	Stem	Acc. Ordering Code	1
5*	Seat	Acc. Ordering Code	2
6*	Body Seal	PTFE	1
6A*	Outer Seal	Acc. Ordering Code	1
7*	Stem Thrust Seal	CF PEEK, PCTFE, CF PTFE	1
7a*	Anti-Abrasion Ring	CF PEEK, PCTFE, CF PTFE	1
9*	Stem Seal	CF PTFE, TFM	1
10	Follower	S. Steel	1
10A	Slide Bearing	S. Steel	1

Item	Description	Material specification	Qty.
11	Disc Spring	S. Steel	2
12	Stem Nut	S. Steel	1
13	Locking Clip	S. Steel	1
15	Serrated Washer	S. Steel	1
16	Handle Nut	S. Steel	1
18	Body Bolt	S. Steel	4-8
20	Anti-Static Spring	S. Steel	1
21	Anti-Static Plunger	S. Steel	1
22	Arrow Flow	S. Steel	2
23	Tag (not shown)	S. Steel	1

* Maintenance kit components

N31 N32 N73 N74 N77 N78

Control Flanged Floating Ball - Ordering Code System

"Mandatory option" options are marked with green background | "Standard offer" options are marked with light green background

1	2	3	4	5	6	7	8	9	10	11	12	13	14	15	16	17	18	19	20	21	22	23	24	...	28	29	30
6	0			F	N	3	1	W	-	6	6	6	6	A	T	G	/	1	5	0		-	S	0	8	-	
Size		Features				Series		Design		Body/end materials		Ball/Stem material		Seat material	Inner Seal	Outer Seal		End Connection					Control Feature				Special features

Size (1-2)		
Code	inch	mm
05	½"	15
07	¾"	20
10	1"	25
12	1¼"	32
15	1½"	40
20	2"	50
25	2½"	65
30	3"	80
40	4"	100
60	6"	150
80*	8"	200

* 31/32 series only

Features (3-6)	
N	Control service
F	Fire safe
O	Clean assembly for O2 service
C	Cryogenic [R]
Z	High Temp. (MTM) [R]
H*	Hydrogen Service

* for material selection - see Hydrogen Service chapter

Series (7-8)	
31	ANSI #150 std. port
32	ANSI #300 std. port
73	ANSI #150 full port
74	ANSI #300 full port
77	DIN PN 16 full port
78	DIN PN 40 full port

Design (9)	
W	Total HermetiX Integrity package
G	Total HermetiX Integrity package - FDA compliant [R]

Body/Ends material (11-12) [R]
Per base series

Ball material (13) [R]	
6	S. SteelCF8M/CF3M
M	High Strength S. Steel
W	Hastelloy-C22
S	254SMO
D	Duplex
K	Super Duplex
7	Monel
A	Alloy-20
C	Hastelloy-C276

Stem material (14)	
M	High Strength S. Steel
6	S. Steel316L
Z	Inconel 718
W	Alloy-C22
S	254SMO A479
A	Alloy-20
D	Duplex A479
K	Super Duplex A479
7	Monel
C	Hastelloy-C276

Seat material (15)	
P	CF PTFE
K	CF PEEK
A	TFM

Inner Seal material (16) [R]
Per base series

Outer Seal material (17) [R]
Per base series

End connections (19-22)	
Flanged	
150	ASME B16.5 #150 RF
300	ASME B16.5 #300 RF
PN16	EN1092 PN16 RF
PN40	EN1092 PN40 RF

Control Feature (24-28)	
V-Port	
S08*	0.8mm Slot on downstream seat
S16*	1.6mm Slot on downstream seat
S32*	3.2mm Slot on downstream seat
V30	V30^0 Shape on downstream seat
V60	V60^0 Shape on downstream seat
V90	V90^0 Shape on downstream seat

* Up to 1"

V-Ball	
SB08*	0.8mm Slot on ball
SB16*	1.6mm Slot on ball
SB32*	3.2mm Slot on ball
VB30	V30^0 Shape on ball
VB60	V60^0 Shape on ball
VB90	V90^0 Shape on ball

* Up to 1"

Hardening	
I	Cr3C2 - Chromium Carbide with Nickel Chrome binder - HVOF technique
O	WC-Co - Tungsten Carbide with Cobalt binder - HVOF technique

Special Features (24-30) [R]
Per base series

[R]:
- For Cryogenic CNxx valve see options in Cryogenic chapter.
- For High Temp. (MTM) ZNxx valve see options in High Tem. (MTM) chapter.

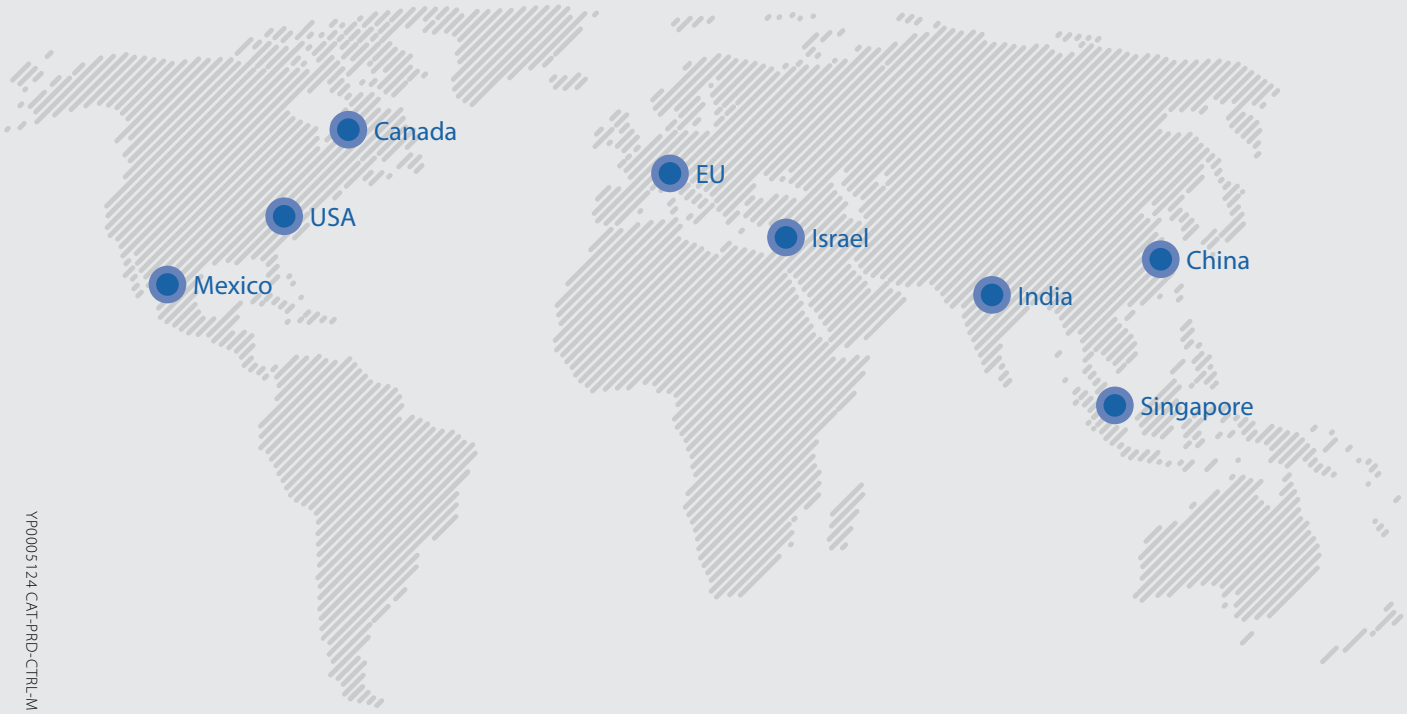

YP0005124 CAT-PRD-CTRL-M ver04_090926

About Habonim

Ball Valves & Actuators for the most demanding, challenging and hazardous applications are our passion and profession for the last 70 years.

We believe in designing, manufacturing and supplying control and shutoff components and solutions that improves the overall safety, integrity and sustainability of the systems they are installed in.

Designed, manufactured and tested according to the highest standards, our products allow us to partner within systems that flow and control varied gases and liquids in diverse markets especially where extreme temperatures and pressures are involved, hazardous materials are used and system performances are critical.

We are leading in cryogenic ball valve-based control solutions, emergency shutoff and specially designed solutions.

Believing that supplying and developing the most effective, safe and reliable products for the global leaders in the LNG and Gas distribution market continually challenges us to improve our capabilities and products.

Best coping with our prestigious customers' most challenging requirements technically, operationally and commercially is our promise fulfilled for decades.

Performing in Demanding Applications

HABONIM
An ITT Company

www.habonim.com

Habonim USA +1 866 261 8400 | **Habonim Canada** +1 866 261 8400 | **Habonim EU** +31 79 204 0781 | **Habonim Singapore** +65 8127 0221
Habonim China +86 186 168 08766 | **Habonim Israel** +972 (0) 4 691 4911 | **Habonim India** +972 (0) 4 691 4911 | **Habonim Mexico** +52 55 1384 3048