SANITARY VALVES

PRODUCT CATALOG

HABONIM
Industrial Valves & Actuators

PERFORMING IN DEMANDING APPLICATIONS

PERFORMING IN DEMANDING APPLICATIONS

Ball Valves & Actuators for the most demanding, challenging and hazardous applications is our passion and profession for the last 70 years. We believe in designing, manufacturing and supplying control and shutoff components and solutions that improves the overall safety, integrity and sustainability of the systems they are installed in.

Designed, manufactured and tested according to the highest standards, our products allow us to partner within systems that flows and control varied gases and liquids in divers markets especially where extreme temperatures and pressures are involved, hazardous materials are used and system performances are critical.

We are leading in cryogenic ball valve-based control solutions, emergency shutoff ,High Pressure and Severe Service and specially designed solutions. Believing that supplying and developing the most effective, safe and reliable products for the global leaders in the Gas distribution Severe Service and BioTech markets continually challenges us to improve our capabilities and products. Best coping with our prestigious customers' most challenging requirements technically, operationally and commercially is the outcome and our contribution to the development of these high end markets.

Table of contents

About Habonim 6

Habonim Valves 11

Sanitary Valves 37

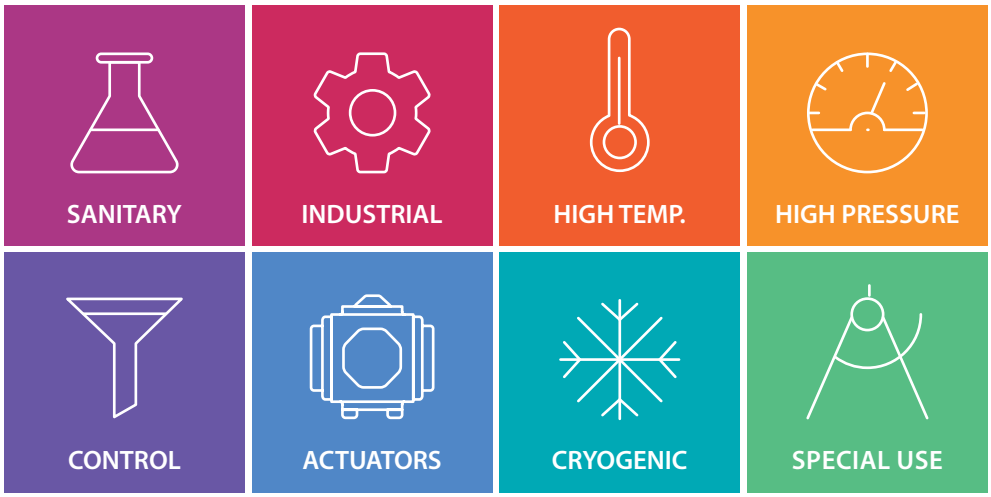

HOW TO USE THIS CATALOGUE

This catalogue provides information in a hierarchical structure starting from Habonim company general information, product families, product lines, product series and to a single product data.

When using information of any level, the aggregate information of the levels above would apply and should be taken into consideration where applicable.

Online Version

A live and up-to-date electronic version of this catalog is available for online use and download on Habonim: www.habonim.com

In the case of discrepancies between the print and electronic versions, we recommend to use the latest version (the version date is printed on the back cover).

Proprietary Note

This catalog is the exclusive property of Habonim Industrial Valves and Actuators Ltd. Any unauthorized reproduction of this catalog, in whole or in part, shall be prosecuted.

Disclaimer

The products and datasheets in this catalog reflect current Habonim standard production specifications. Habonim Industrial Valves and Actuators Ltd. Reserves the right to modify products and materials, including modifications undertaken to comply with specific customer requests and technical specifications without further notice.

It is always the system designer and the end-user responsibility to verify all equipment use in their system is properly selected to ensure safety and integrity of their systems. Habonim offers only general information based on common market knowledge and standard market adaptations for its valves. For each system and use, the system designer and end-user must consider the particular operations conditions, media parameters and any other implication of their system for the proper selection of valves to be used on their solely responsibility.

PRODUCT FAMILIES

Temperature	
°C	°F
650	1200
600	1100
550	1000
500	900
450	800
400	750
350	650
300	550
250	480
200	390
150	300
100	200
50	120
0	32
-50	-58
-100	-148
-160	-260
-185	-300
-196	-321
-269	-450

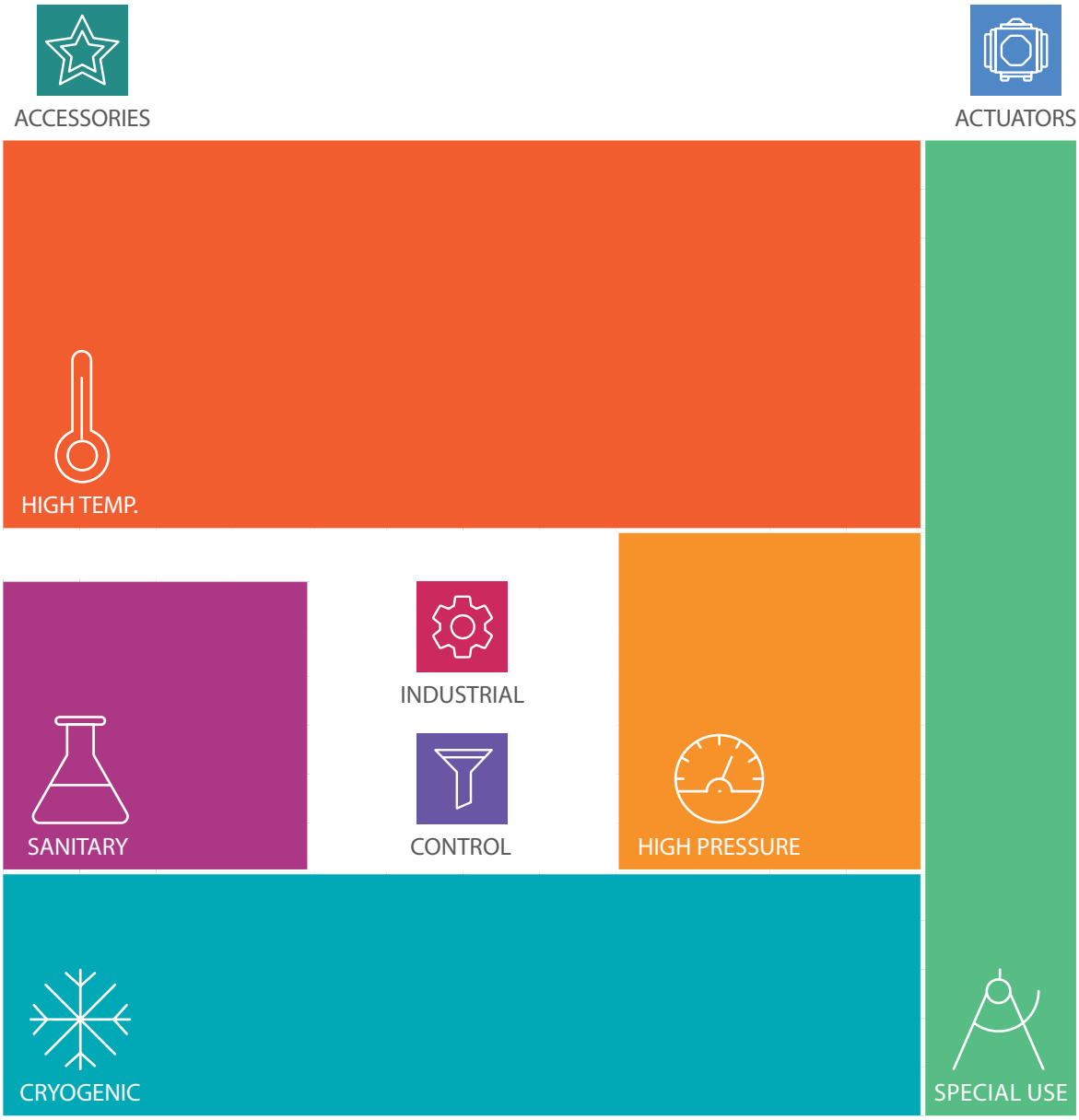

ASME Class				150		300	600	900		1500		2500		6000
Pressure Bar	-1	0	16	20	40	50	100	150	200	250	350	420	700	1000
Pressure Psi	-14	0	230	290	580	750	1500	2250	3000	3750	5000	6000	10000	15000

ABOUT HABONIM

Sustainability, Safety and Health

Habonim management and employees around the world are dedicated to promoting, in every aspect of their work, the following principles and guidelines:

Sustainability

Habonim management pledges to comply with the relevant laws, standards, and regulations to preserve the environment and promote sustainability at company premises and in our products.

Safety & Health

Habonim aspires to a safe and healthy work environment, aiming for zero work accidents and promoting our employee's wellbeing. Management and the entire workforce comply with the relevant laws and regulations necessary to achieve this goal.

Operations

Habonim operates a global infrastructure to best support customers and projects by supplying our catalog standard products, specially adjusted catalog products and custom-made products and sub-systems. Ball valves, actuators and control packages are our core deliveries.

Standard Delivery

With the goal of offering our high-end products as well as our general-use products with best availability, best quality, cost-effectiveness and with simple communication, handling and operation, we mark selected items designated as Standard Offer in most of our product lines with the Green "Standard Delivery" mark in order to provide best availability and supply readiness.

Materials

Habonim uses and stocks metallic, polymeric and other materials used in our products, all sourced from well-recognized manufacturers with the required testing, certifications and documentation.

Heat numbers and materials certificates are managed throughout the manufacturing and assembling process to enable full backtracking for our product components.

Available Certifications, some supply as standard and some per request:

- Materials certificates per EN10204 type 2.2/3.1/3.2
- FDA / USP Class VI compliant for polymers, elastomers, and lubricants where applicable
- CE1935:2004 compliant for polymers, elastomers, and lubricants where applicable

Tagging, Traceability

Each product is tagged for traceability. For product identification, a stainless steel nameplate is placed on the product body.

Traceability of assembly and testing procedures, heat codes, and foundry identification as per B16.34 stipulations where applicable.

ABOUT HABONIM

Cleaning, Assembling and Packing

Habonim manages different levels of cleaning, assembling and packing lines to meet different levels of end product and use requirements:

Commercial Service

Excessive hydrocarbon films, water, rust or mill scale, shop dirt, filings, chips or loose weld spatter is removed from the valve parts.

- Accessible surfaces are inspected for cleanliness by the naked eye under bright white light.
- Inaccessible surfaces are inspected and cleaned indirectly by wiping.
- A sticker on the package indicates the cleaning grade of the product.

Oxygen

A meticulous cleaning and assembly procedure eliminate the ignition hazards that can be caused by the presence of hydrocarbon oil, grease, and metal chips.

Our process of cleaning, assembling and packing refers to international standards in partial or in full:

- ASTM A380 • CGA G 4.1 • EN 12300

Habonim uses an environment friendly, alkaline-based degreasing process with controlled parameters. Valves are assembled in an oil-free restricted area by personnel who are specially equipped and trained to perform this task. The assembling area, work surfaces, equipment and tools are specially maintained to ensure cleanliness requirements are met.

- Valves are capped ends and plastic bagged
- A sticker on the plastic bag indicating "oxygen use"

High Purity Service

Habonim offers as an option high purity ball valves for gas and water distribution, as well as chemical handling processes. Such valves are cleaned in accordance with CGA G4.1:

- Cleaning, drying and packaging under Class 100,000 conditions
- Assembly under Class 10,000 conditions
- No lubricants used
- 100% helium leak tested
- Capped ends and plastic bagged

Quality

Habonim strives to deliver quality products that meet and exceed customer expectations, providing complete and total satisfaction and to operate, instruct and train employees globally in light of standards such as:

- ISO 9001:2015
- CE PED 2014/68/EU (Module H)
- ATEX 2014/34/EU
- API SPEC Q1: 2013
- TPED 2010/35/EU – for specific product lines
- IEC 61508-2:2010 (SIL 2 / 3) – for specific product lines
- SIL IEC 61508-1,2, 2010/35/ EU – for specific product lines

Habonim's management diligently monitors goals and objectives and continually enhances processes and products as well as the safety and environmental practices in light of the above.

Testing and Laboratories

Habonim operates a wide range of testing laboratories and equipment for ongoing and R&D needs and certifies products for cryogenic, high pressure, aggressive or clean, industrial use and more.

Habonim carries out external and internal testing and certification of products per customers' requests and market trends on a regular basis and offer a wide range of certified products for diverse certification bodies as but not limited to:

VALVES

Habonim Ball Valves 12
Valve Features 22
Sanitary Valves 37

HABONIM BALL VALVES

General

Habonim develops, designs, manufactures, tests, supplies and service ball valves for the global market and is globally leading in some segments of ball valve usage. With high-end products, uncompromised quality, serviceability and innovation to create solutions for the most demanding applications Habonim has gained a long track record of proven success. Habonim's ball valve product line supports extreme cold to extreme heat systems, industrial use up to very high pressures, and meets the specific needs and regulations of a wide range of industries.

Habonim ball valve product lines are subject to the company's regulation, methodologies and certification – for more information, see Habonim Introduction chapter.

Design and Engineering

Habonim designs its valves with accordance to international standards and guidelines in full, partial or with reference to. For some an external certification is available:

- API 6D (number 6D-1278)
- ASME VIII Div I
- API608
- ASME B16.34
- ISO 14313
- ISO 17292
- ASME BPE (48SER)
- ISO 15848-1, API641
- Fire safe design per API 607, ISO 10497, API6FA
- Antistatic design per ISO 17292

For relevant valves, Habonim complies or use as guidelines market leading standards such as, but not limited to:

- NACE MR-0175
- NDT/DT (according to ASME B16.34)
- MSS SP-55
- Polymers per TSE/BSE, BAM, FDA, USP, CE1935:2004

Testing

Habonim refers to the international standards for valve testing:

- API 598
- ISO 15848-2
- API6D
- EN 12266-½
- ISO 5208
- BS 6364

Strength/Valve shell leak test:

- Tested per quality system procedures
- By usage of compressed air, nitrogen or water

In-Line Leak Test:

- 100% of valves are tested
- By compressed air, nitrogen or helium
- At 5-7 bar pressure
- Pass criteria:
  - Rate A result (bubble tight shutoff) for soft seated valves

Functional Test:

- 100% of valves are tested
- Torque is tested to design limits

Packing

Habonim valves are delivered as a standard as:

- Valve in open position
- Actuated valves are delivered in fail-safe position
- Ends are capped
- A firm, clean package packed by soft, clean, shock-absorbing material for transportation protection.

HABONIM BALL VALVES

Total Hermetix™

As a standard, most of HABONIM valves are equipped with the Total HermetiX integrity package comprised of three main elements and a superior inline sealing mechanisms in some of them:

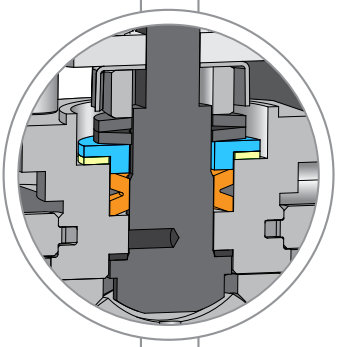

Zero fugitive-emission no maintenance stem sealing

- Patented HermetiX™ stem sealing design with zero fugitive emission sealing capability.
- Tested or certified according to ISO 15848-1 and API641 standards.
- Up to 500,000 cycles of operation.
- Field proven for millions of cycles continuous operation.

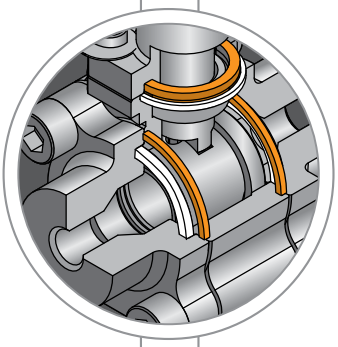

Double body sealing

- Body-to-ends & body-to-bonnet double sealing for superior sealing.
- Selection of sealing materials for diverse applications.
- Fugitive emission prevention.

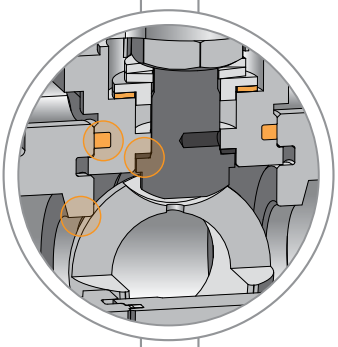

Fire safe

- According to API 607 & ISO 10497 - where applicable.
- Type-tested and certified by leading certification bodies for marine service – for some valve series.
- Clean fire-safe construction guarantees no graphite contamination of the media flow.

Superior In-line sealing

A variety of implemented mechanism provides extended in-line sealing capabilities such as:

- Bidirectional sealing
- High pressure full Δp sealing
- High & low pressure sealing
- others

Quarter Turn Valves - Introduction

Quarter-Turn Ball Valves design styles

HABONIM offers ball valves in a variety of design styles and technologies that is most effectively supports a wide range of applications and use cases. We offer Floating ball style valves and Trunnion-mounted ball style valves with several construction methods.

Floating Ball Valves design

The floating ball valve is the legacy style for ball valves, the most used and best fit for many industrial applications. The design places the valve ball between seats that holds it in place but without a firm connection to the valve body, hence, it "floats" inside the valve. Assuring a tight seal between the seats and the ball as well as the between the seats and the valve body guaranties the valve in-line sealing by a simple structure with minimal parts. As a rule of thumb, a floating ball valve should be considered as first choice wherever applicable.

Trunnion-Mounted Ball Valves

In a trunnion-mounted valve, the ball rotates only around its vertical axis while being mechanically anchored to the top and bottom of the valve body. This construction balances the torques of the rotating ball and keeps it in a lower range than with similar sized floating ball valves by tolerating the heavy loads applied to the valve trim as a result of large sizes, high pressures and dynamic temperature cycles. The seats are compressed against the ball sphere by the force of the springs and by the line pressure, providing "double block" or "double isolation" capability to the valve. Trunnion-mounted ball valves are often used for larger sizes, higher pressure ratings and dynamic temperatures.

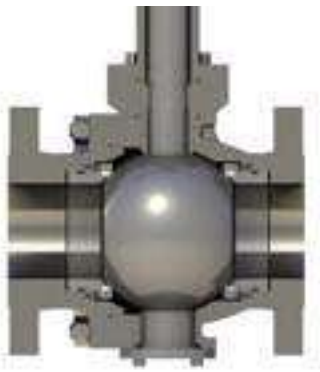

HABONIM BALL VALVES

Habonim Floating Ball Valve Designs

One-piece design

The standard-port, one-piece, solid-cast body and flange design ensures minimum leak paths. The valve complies with ASME B16.5 for flange dimension and ASME B16.10 for Face-to-Face dimensions. In the standard design, the valve flange raised face is serrated per ASME B16.11. The body includes an ISO 5211 integral mounting pad for easy automation. To facilitate easy assembly and maintenance, the valve is designed with one flange with a side entry that allows all inner parts to be positioned easily, and with a threaded plug that sets all parts under a precise preload with high repeatability. The result is optimum operating torque and bubble tight shut-off. It is possible to modify the ASME-standard flange connections by drilling the flanges to the EN1092 PN16 and PN40 standard. It is also possible to change one flange to a weld-end connection. A thermal jacket (steam jacket) over a one-piece design is the most efficient solution in applications where heating up the valve's outer surface (and the media inside) is mandatory to maintain media flow.

31 series | Vacuum 10^{-6} Tor; ASME B16.34 class 150 | Size ½"-8" (DN15-DN200)
32 series | Vacuum 10^{-6} Tor; ASME B16.34 class 300 | Size ½"-8" (DN15-DN200)

Two-piece design

This unique full-port two-piece solid-cast body and flanged end design supports high flow capacity. The Habonim two-piece design is available in ASME B16.10 for Face-to-Face dimensions and ASME B16.5 class 150 and ASME class 300 flange dimensions and also in EN 1092 PN16 and PN40. In the standard design, the valve flange raised face is serrated per ASME B16.11. The body includes an ISO 5211 integral mounting pad for easy automation. The valve is designed as a split construction which facilitates easy assembly and maintenance with standard tools. Tightening the end connector to the valve body via the body bolts preloads the complete ball-seat set, ensuring low operating valve torque, repeatability, and bubble tight shut off.

73 series | Vacuum 10^{-6} Tor; ASME B16.34 class 150 | Size ½"-8" (DN15-DN200)
74 series | Vacuum 10^{-6} Tor; ASME B16.34 class 300 | Size ½"-8" (DN15-DN200)
77 series | Vacuum 10^{-6} Tor; EN 1092 flanged PN16 | Size 3"-6" (DN80-DN150)
78 series | Vacuum 10^{-6} Tor; EN 1092 flanged PN40 | Size ½"-2 ½" (DN15-DN65)

Three-piece design

The forged, cast, or rolled bar 3-piece design is comprised of a body (center section) and a variety of end connectors (thread, weld, flange) to facilitate a wide range of construction configurations. The swing-out design of the center section allows the end connector to remain a fixed part of the pipe work while the valve itself can be maintained by swinging out the center section only.

26 series | Full port, solid cast | Vacuum 10^{-6} Tor
| In full compliance with ASME B16.34 class 600 | Size 2"-8" (DN50-DN200)

27 series | Standard and full port, forged or rolled bar | Vacuum 10^{-6} Tor
| ASME B16.34 class 2500 (wall thickness) | Size ¼"-2" (DN8-DN50)
| ASME B16.34 class 1500 (wall thickness) | Size 2½"-8" (DN65-DN200)
| Hybrid seats technology as an option

28 series | Standard & full port, forged or rolled bar, robust design, with Hybrid seats technology | Vacuum 10^{-6} Tor
| ASME B16.34 class 2500 (wall thickness) | Size ¼"-8" (DN8-DN200)

47 series | Standard or full port design, forged, cast or rolled bar | Vacuum 10^{-6} Tor
| ASME B16.34 class 900 (wall thickness) | Size ¼"-2" (DN8-DN50)
| ASME B16.34 class 400 (wall thickness) | Size 2 ½"-6" (DN65-DN150)

48 series | ASME BPE Floating Ball 3 Piece | Tube Size design, forged, cast or rolled bar
| Vacuum 10^{-6} Tor
| ASME B16.34 class 300 | Size ½"- 1½" (DN15- DN40)
| ASME B16.34 class 300 | Size 2"- 6" (DN50- DN150)

Three-piece Threaded-Body design

The forged, cast, or rolled bar 3-piece threaded-body design is comprised of a body (center section) and a variety of end connectors (thread, Coned & Threaded) to facilitate a wide range of construction configurations. The no-bolts design of the valve is suitable for high and very-high pressures.

24 series | Standard and full port, Floating ball design, forged or rolled bar
| Vacuum 10^{-6} Tor | In full compliance with ASME B16.34 class 2,500
| Size ¼"-1½" (DN8-DN40)

29 series | Forged or rolled bar | Floating ball design | Vacuum 10^{-6} Tor
| In full compliance with ASME B16.34 for 1,000bar (15,000psi)
| Size ¼"-1" (DN8-DN25)

99 series | Forged or rolled bar | Trunnion ball design |Vacuum 10^{-6} Tor
| In full compliance with ASME B16.34 for 1,000bar (15,000psi)
| Size ¼"-1" (DN8-DN25)

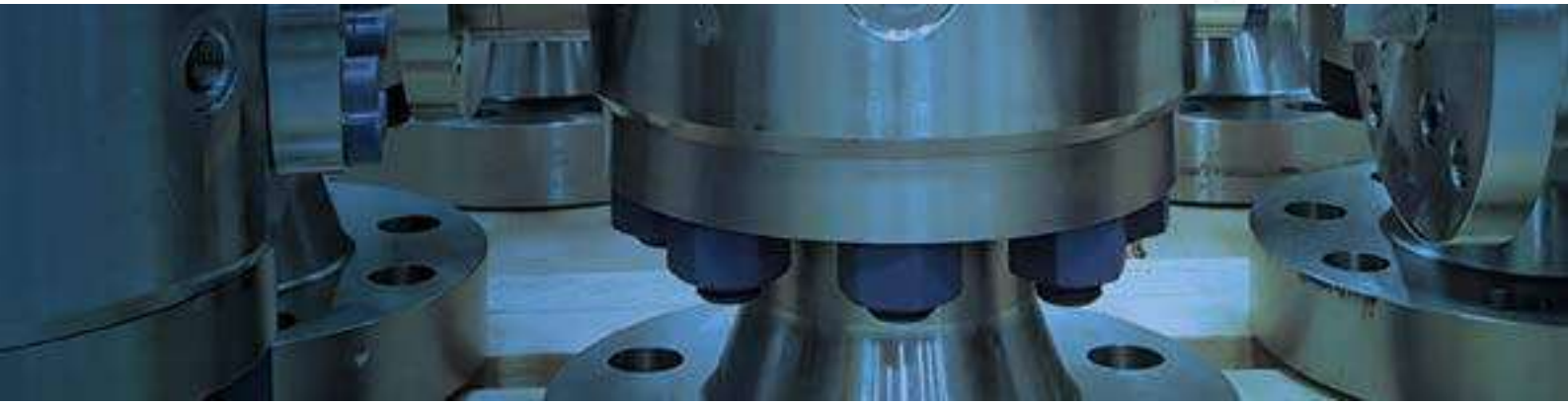

HABONIM BALL VALVES

Habonim Floating Ball Valve Designs

Multiport valves

Multiport valves are primarily used to simplify pipe and valve systems by replacing multiple two-way valves with a single multiport valve. They minimize dead legs, optimize drainability, simplify system validation and have a reduced envelope profile for easier installation. Multiport valves allow piping and machine engineers to design a simpler system that saves space and has fewer flow elements and leak paths. One multiport valve can replace multiple two-way valves and automation devices, and provides safe and easy changeover and flow shutoff, all within a confined space. Reducing the quantity of piping and fittings also means faster and more cost-effective construction. Available in a variety of flow patterns and directions and in both automatic and manual configurations, the design possibilities offered by the multiport valve are virtually unlimited.

61 series
| Multiport with three horizontal ports
| Additional bottom port available
| Standard or full port design, forged or cast
| Vacuum 10^{-6} Tor
| ASME B16.34 class 600 (wall thickness) | Size ¼"-1½" (DN8-DN40)
| ASME B16.34 class 300 | Size 2"-4" (DN50-DN100)

62 series
| Multiport with four horizontal ports
| Additional bottom port available
| Standard or full port design, forged or cast
| Vacuum 10^{-6} Tor
| ASME B16.34 class 600 (wall thickness) | Size ¼"-1½" (DN8-DN40)
| ASME B16.34 class 300 | Size 2"-4" (DN50-DN100)

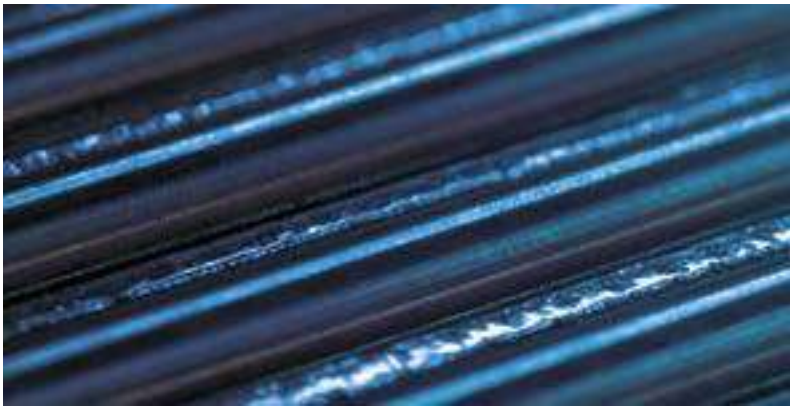

Diverter valves

Diverter valves are primarily used to split or combine process flows, or to switch medium among different pieces of process equipment such as pumps, filters, or whole pipelines Diverter valves provide reliable high flow rates in the most severe operating conditions, including vacuum conditions. They can also handle highly viscous media without the need for constant back-flushing. The diverter valves are available with different ball designs to accommodate a wide range of flow patterns. These flexible flow combinations reduce the number of valves in a system, thereby saving costs and facilitating easier control. Because all of the diverter valves have the same body Face-to-Face dimensions, they can be used with all standard end connections.

D31 series
| Bottom entry diverter
| Standard port design, cast | Vacuum 10^{-6} Tor
| ASME B16.34 class 150 (wall thickness) | Size ½"-8" (DN15-DN200)

S31 series
| Side entry diverter
| Standard port design, cast | Vacuum 10^{-6} Tor
| ASME B16.34 class 150 (wall thickness) | Size ½"-8" (DN15-DN200)

D32 series
| Bottom entry diverter
| Standard port design, cast | Vacuum 10^{-6} Tor
| ASME B16.34 class 300 (wall thickness) | Size ½"-8" (DN15-DN200)

S32 series
| Side entry diverter
| Standard port design, cast | Vacuum 10^{-6} Tor
| ASME B16.34 class 300 (wall thickness) | Size ½"-8" (DN15-DN200)

D47 series
| Bottom entry diverter
| Standard or full port design, forged or cast | Vacuum 10^{-6} Tor
| ASME B16.34 class 600 (wall thickness) | Size ½"-2" (DN15-DN50)
| ASME B16.34 class 300 (wall thickness) | Size 2½"-6" (DN65-DN150)

S47 series
| Side entry diverter
| Standard or full port design, forged or cast | Vacuum 10^{-6} Tor
| ASME B16.34 class 600 (wall thickness) | Size ½"-2" (DN15-DN50)
| ASME B16.34 class 300 (wall thickness) | Size 2½"-6" (DN65-DN150)

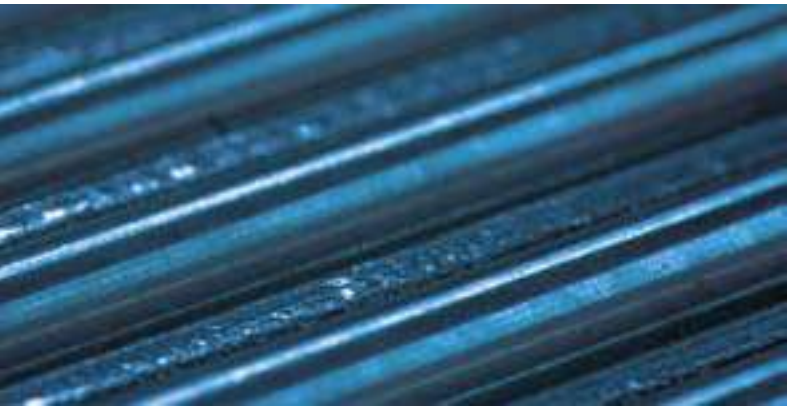

HABONIM BALL VALVES

Habonim Trunnion-Mounted Ball Valve Designs

Features:

- Specially designed to endure the harsh conditions of the oil & gas, petrochemical and other demanding applications
- Underground, Above ground, Offshore and Onshore installation
- Full differential pressure (Δp) per the valve pressure rating
- Manually applies a maximum operating force of 360N (80 lbf)
- Double block & bleed single valve capability
- Seats preloaded by helical springs
- Antistatic grounding between ball, stem & body as standard
- Bi-directional flow
- Double Piston Effect (DPE) and Single Piston Effect (SPE) designs are both available
- Optional additions for 8" valve size and above:
  - Injection fittings for emergency stem or seat sealant & lubrication maintenance
  - Equipped with lifting lugs
  - Manually operated via gearbox
- Buttweld end valves may be supplied with extended spool pieces (PUPS) to avoid any risk of seat and seal damage during welding and post weld heat treatment operations

External finishing:

- Austenitic stainless steel valves are delivered in their natural finish
- Carbon steel valves are sandblasted and externally coated with paint
- Other painting systems are available upon request

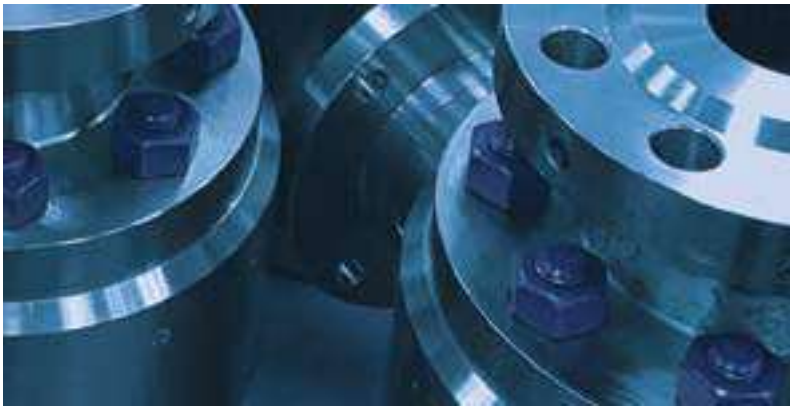

Two-Piece Design

The 2-piece cast trunnion-mounted ball valve designs are cost effectively support pressure ratings up to ASME Class 600, serving as the first choice where applicable with ANSI flange ends.

81 series | Full Port | Vacuum 10^{-6} Tor
| ASME B16.34 class 150 (wall thickness) | Size 2"-16" (DN50-DN400)

82 series | Full Port | Vacuum 10^{-6} Tor
| ASME B16.34 class 300 (wall thickness) | Size 2"-16" (DN50-DN400)

83 series | Full Port | Vacuum 10^{-6} Tor
| ASME B16.34 class 600 (wall thickness) | Size 2"-16" (DN50-DN400)

Three-Piece Design

The 3-piece forged body and end design is a robust heavy-duty design for pressure ratings up to ASME Class 2500 With ANSI flange, DIN flange or weld ends.

91 series | Full & Standard Port | Vacuum 10^{-6} Tor
| ASME B16.34 class 150 (wall thickness) | Size 2"-16" (DN50-DN400)

92 series | Full & Standard Port | Vacuum 10^{-6} Tor
| ASME B16.34 class 300 (wall thickness) | Size 2"-16" (DN50-DN400)

93 series | Full & Standard Port | Vacuum 10^{-6} Tor
| ASME B16.34 class 600 (wall thickness) | Size 2"-16" (DN50-DN400)

94 series | Full & Standard Port | Vacuum 10^{-6} Tor
| ASME B16.34 class 900 (wall thickness) | Size 2"-16" (DN50-DN400)

95 series | Full & Standard Port | Vacuum 10^{-6} Tor
| ASME B16.34 class 1500 (wall thickness) | Size 2"-12" (DN50-DN300)

96 series | Full & Standard Port | Vacuum 10^{-6} Tor0
| ASME B16.34 class 2500 (wall thickness) | Size 2"-12" (DN50-DN300)

VALVE FEATURES

Fire Safe Design

Valves to be used in explosive or fire-hazard areas need to be (according to some standards and regulations) be designed to prevent in-line leaks for at least 30 minutes when exposed to flames and/or temperatures between 900 - 1000°C. In addition, after cooling down, a fire-safe valve has to be able to be cycled once and seal at an acceptable level of in-line leakage

Habonim fire-safe valves include body seals fabricated from graphite, which is well-known as a fire-retardant material. In the event of fire, the valve's soft seats melt and the ball is pressed against a metallic fire lip on the downstream end connector thus preventing in-line leakage. The fire also burns off the stem's thrust seal, causing the stem, which has a machined chamfer at its root, to be pushed up and form a metal-to-metal seal with the valve body and prevent leakage. For stem sealing Habonim is using the patented HermetiX seal, a unique polymer-based graphite-free stem seal that, even after its polymer materials have melted, allows the stem to stay aligned and fully operable after cool-down. During normal operation, our polymer-based stem seal allows 500,000 operation cycles without maintenance, making it remarkably more durable than porous graphite seals, which have to undergo maintenance every 5,000 cycles without refurbishment. This design has been tested and certified to API 607 and ISO 10497 standards.

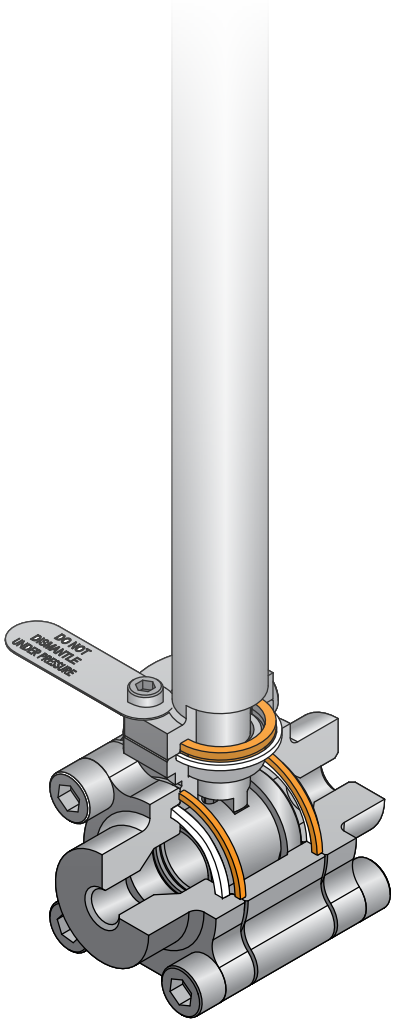

Tongue & groove body seal design

A 'tongue' machined on one side of the valve body and a matching 'groove' machined on the opposite side provides a perfect interlock system that precisely aligns the body and ends along the valve's center axis, thus increasing accuracy and repeatability during valve assembly and maintenance. The tongue & groove design is used most of our fire valves so that the expanded body seal is fully encapsulated and compressed in the event of a fire. The tongue & groove design forces fluid emissions to flow in a labyrinth pattern, thus ensuring zero leakage into the atmosphere.

Body bolts

Instead of long through-way bolts and nuts, all of our 3-piece fire-safe valves use double the number of one-size-up short bolts threaded into the body. In the event of fire these bolts minimize thermal expansion and prevent external leakage.

Ball Configurations

Our mirror-polished solid balls ensure tight shutoff and long service life. All balls come with specially rounded leading edges to eliminate excessive seat wear during rotation. Our balls technology can supports verity of metals (some are available only upon request) such as Stainless Steel 316 (CF8M), Alloy-C276, Alloy-C22, Monel 400, 254SMO, Duplex, Super Duplex, Inconel 625, Titanium and more. Ball materials other than Stainless Steel 316 (CF8M), are marked for clear identification.

There are different styles related to the ball port itself:

- Standard port ball (also known as reduced port) - The flow through the ball is one size smaller than the pipe's size resulting in a flow area smaller than the pipe's area. The reduced flow area increases the flow velocity (assuming a constant flow discharge) and the head-loss over the valve.
- Full port ball - Has an over-sized ball so that the ball's port is the same as the pipe's inner diameter, thus reducing friction loss. Flow is unrestricted but the valve is larger so full-port balls are typically used where free flow is particularly important such as in pipelines that require pigging.
- Tube size ball (also known as true port) has a port which is identical to the tube's inside diameter. This configuration is used mainly in the pharmaceutical industry where dead legs and pockets of contamination are unacceptable.

Pressure equalizing hole

Balls typically have a hole in the stem slot to equalize the pressure over the ball sphere. The pressure inside the ball port and the pressure in the valve cavity are identical and hence no stress is applied to the ball sphere. The pressure equalizing hole is eliminated in the following cases:

- High surface finish requirements, mechanically polished or electro-polished
- Diverter valves
- Valves with cavity filler seats
- Double block and bleed valves
- Pharmaceutical or other applications with very high sanitary requirements

Minimum stress on the ball by adding a pressure equalizing hole

VALVE FEATURES

Ball Configurations

Cavity pressure relief

This safety feature is for valve applications where a trapped cavity must be avoided a 3 mm hole is included in the upstream ball sphere so that any pressure that builds up in the valve cavity will be released into the upstream pipeline. The use of a cavity pressure relief hole feature is mandatory when using ammonia, chlorine or any other liquid media that is at risk of transforming into a gas and thus elevating the pressure within the valve cavity in an uncontrolled manner. A valve which includes the 'P250' code will always be unidirectional, and will include an arrow flow plate attached to the valve body. Improper installation in the opposite direction will cause an in-line leak.

3 mm relief hole
face the upstream

'C' Ball

Habonim offers a two-way ball with its upstream sphere completely machined through the ball port and thus has a C shape. This feature is mainly used where media tends to crystalize on the upstream ball sphere such as, for example, molten sugar or baked ground coffee. When a standard valve is in the closed position and a solid layer has adhered to the ball's upstream sphere, subsequent valve operation will erode the upstream soft seat, loosen the pre-load of the ball seats set, and rapidly degrade the valve's functionality. With a 'C' ball media solidification is impossible as there is no surface area on which the media can accumulate. The upstream seat withstands the media unscratched; the pre-load of the ball seat set as well as the functionality of the valve remain intact for a longer period of time.

Upstream sphere completely
machined in a 'C' ball

Multiport and diverter ball

Multiport and diverter ball designs are used primarily to split or combine process flows or to switch medium between alternative pieces of process equipment. The diverter ball configuration can be either bottom entry or side entry. The diverter ball has the same sphere diameter as standard 2-way balls so the same soft parts can be used. Multiport balls have numerous flow configurations, which are described in detail in the Multiport chapter of this catalog. The multiport ball has a larger sphere diameter than a diverter ball, allowing a firm grip of four seats vs. two seats in the diverter configuration.

Diverter ball with isometric
T port construction

V-Ball

The V ball is used in control valve solution for less demanding applications, such as clear liquid at a maximum pressure drop of 6 bar (87 psi), or clean gas at a maximum pressure drop of 10 bar (145 psi), and maximum temperatures of 120 °C (248 °F) for both. The V ball design is comprised of a floating characterized ball, mounted between two seats, which maintain a trim preload and bubble-tight shut-off and low torque demand. V-Balls come in a variety of 'V' and 'slot' shapes, and can be custom designed to meet any control requirement. The V-Ball is available in a wide range of high-alloy materials and coatings for highly corrosive applications.

Characterized ball for flow
control applications

Downstream pressure relief ball

Habonim ball downstream pressure relief is designed with a diagonal hole in the downstream sphere toward the bottom of the ball. In the open position the flow runs smoothly through the valve. When the valve is closed the downstream pressure is vented through the diagonal tunnel and out via a third port incorporated into the valve body so that the relieved pressure can be diverted safely to a secured area. This feature is mainly used for pressure gauges and instrumentation service. This design eliminates the need to install an additional downstream pressure vent valve.

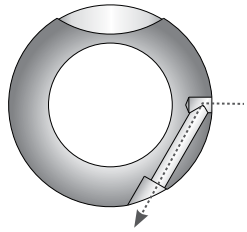

Special diagonal tunnel vents downstream pressure when the valve is closed.

CIP/SIP

Habonim 'CIP' ball code is mainly used in sanitary and biopharm applications. in clean applications the main ball valve problem is contamination caused by impurities trapped in the cavity between the ball's outer sphere and the valve body's inside diameter. To overcome this problem Habonim has designed a special ball that allows the stream to clean the valve cavity thoroughly during the CIP/SIP process, with the valve in the full open position. The bottom line: Bidirectional and streamlined flow with a high Cv, and self-cleaning of hidden cavities.

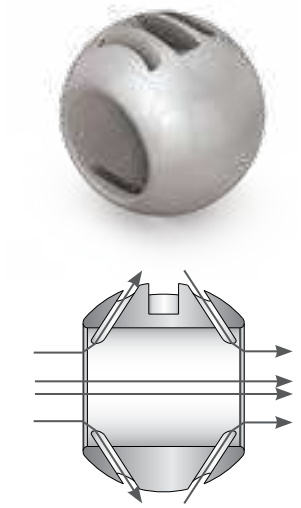

With the valve in the open position, special tunnels flush the valve cavity constantly

VALVE FEATURES

Seat Configurations

Standard seat

A flexible, precision-machined seat that provides the highest seal capabilities (EN12567 Rate A) in high pressure and vacuum conditions. Its unique design reduces valve torque, facilitating a more compact, lower-weight automated package. The design also reduces wear, thus extending the life of the seat. The seat perimeter has pressure-equalizing slots to allow pressure to penetrate into the body cavity for better sealing and for avoiding upstream seat collapse into the valve cavity while turning the valve ball from the open to closed position under high differential pressure.

Standard seat

Self-Relieving-Seat (SRS)

The Self Relieving Seat (SRS) is used mainly in syltherm and dowtherm services in the chemical and biopharm industries. Both syltherm and dowtherm have a high thermal expansion coefficient and in trapped cavities (such as when the valve ball is in its closed position) even a moderate temperature increase will cause dramatic pressure build-up that can cause cessation of valve operation, seat swelling, and even valve shell failure. The SRS is designed to flex and allow the trapped pressure to escape into the pipeline, while shutting off as soon as the peak pressure is relieved. The pressure relief is achieved by a special internal groove that is machined into the seat radii facing the ball. Additional radial grooves enable the pressure to bypass the ball and access the internal groove. The seat sealing surface is in the central internal section and provides tight shutoff. The outer section of the seat above the internal groove gives the support needed to the ball when higher line pressure pushes the ball toward the downstream seat, thus preventing "crushing" of the seat.

Self-Relieving-Seat (SRS)

Seat-seal

In some use cases valve must seal the pressure at the upstream side, which contradicts the traditional floating ball mode of operation (where sealing is typically done on the downstream seat only). Habonim's solid one-piece seat-seal design blocks the flow through the back of the seat, generating an upstream seal. Seat-seal can be used with differential pressure up to ASME Class300. For higher differential pressures use either a valve with hybrid seats, or a dual floating ball valve integrated into a one block or trunnion mounted valve.

Seat-seal

Hybrid seat

When a soft seated floating ball valve is held even momentarily at mid position, the upstream seat is only partially supported by the ball and can be pushed towards the valve cavity by the force of the stream. This deformation is amplified with increased media density, high differential pressure and/or high velocity. Under these extreme conditions the deformation can: cause the ball to grip the unsupported area of the soft seat and jam the valve; slice the seat by the port edge of the ball; or trigger stem twisting (caused by excessive torque applied by the operator trying to close the valve). Habonim's line of Hybrid seats were developed especially to overcome the problems posed by high differential pressure applications. The combination of a metallic housing and polymer insert offers the stiffness of a metal seat with the bubble tight shutoff leakage rate and operating torque of a soft seat. Different hybrid seat designs were developed to meet the needs of different applications, and are designated by the metallic housing design.

Hybrid seat

Seat Configurations

Cavity filler seat

The cavity filler seat design minimizes crevices and gaps between the ball and the valve body, thus reducing the risk of trapped contaminants. Because the valve body is specially machined with a larger bore diameter to fit the special cavity filler seat dimensions, they cannot be retrofit into a standard valve body. The cavity filler seat is a one piece seat-seal design and is therefore suitable for use with the Habonim 3-piece product line.

Note: A valve with a cavity filler seat cannot be used in fire-safe service.

Cavity filler seat

Metal seat

Habonim metal seats are used for extreme service applications where high temperature, abrasion and/or corrosion restrict the use of soft seats. The metal seats are mate lapped with the ball for enhanced engagement and sealing. A variety of surface treatments and coatings can be applied to the seat's outer surface to withstand corrosion, galling and other forms of wear.

Metal seat

V-port seat

Superior control performance and accuracy is designed into the geometry of the downstream V-port. The precision wire cut 'V' shape of a metal seat, enables equal percentage flow characteristics, while S-port design ('Slot') provides linear flow characteristics. V-Port valve assembly, comprised of a ball and wire cut metal seat, lapped together into a single seamless component. V-port design provides the high rangeability and precision throttling required for clean or dirty liquids and gases, as well as fibrous suspension applications. The streamlined flow passage allows for high recovery, maximum efficiency and excellent erosion resistance.

V-port seat

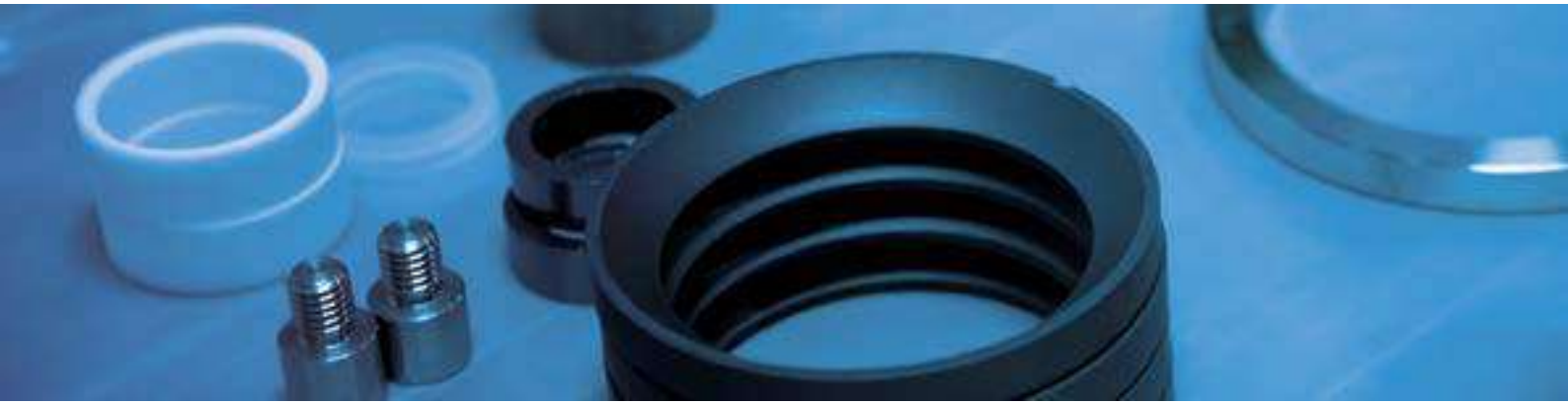

VALVE FEATURES

Stem Design

A crucial component in a quarter-turn ball valve is the stem, which transfers the torque from the operator to rotate the ball and control its movement. The stem geometry and surface finish is crucial to minimize stem leak and maximize ease of operation. The stem is a dynamic element and, in most cases, is the only element that protrudes from the pressure vessel and is thus subject to safety issues as well. Habonim's robust stem design complies with ASME B16.34 and API 6D and can endure at least twice the valve's nominal torque. To solve a major safety issue, the stem is designed to be "blowout-proof". Because it is inserted into the valve body from within, the stem will not release under pressure. All Habonim stems are, by default, fire-safe design. A special chamfer is machined at the root of the stem so that, in the event of fire, the stem is pushed upwards and seals against the valve body - metal to metal engagement. Various stem materials are available, from austenitic stainless steel to nickel alloys, to titanium for light and moderate torque requirements, and for high cycle applications or high torque demands. The stem top planes for valve sizes ½" (DN15) up to 2½" (DN65) are typically a Double-D shape, while 3" (DN80) stems and above typically have a square shaft (although a Double-D stem can be provided upon request by adding the 'WR' suffix to the valve description).

Anti-Static Design

An anti-static device provides for electrical continuity between the body, ball and shaft of the valve and is used to discharge static electricity buildup on electrically isolated balls. According to the EN ISO 17292 standard, all valves with a size up to 2" (DN ≤ 50) require a stem/body contact, while larger valve sizes also require a ball/stem contact. The anti-static feature shall have electrical continuity across the discharge path with a resistance not exceeding 10 Ω from a power source not exceeding 12 VDC when type tested on a new, dry, as-built valve after pressure testing and cycling of the valve at least five times. The Habonim anti-static device, in which contact is made via a spring loaded stainless steel element, complies with EN ISO 17292 and is, in fact, built-in to all Habonim valve product lines, without exception.

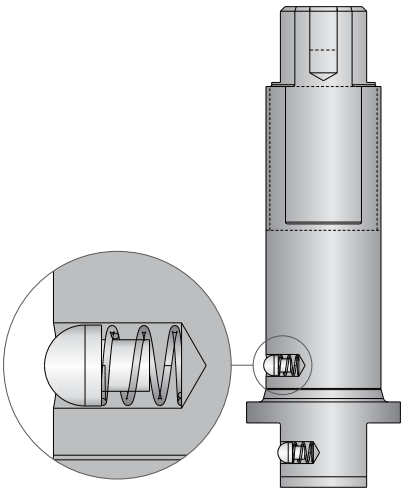

Anti-static design

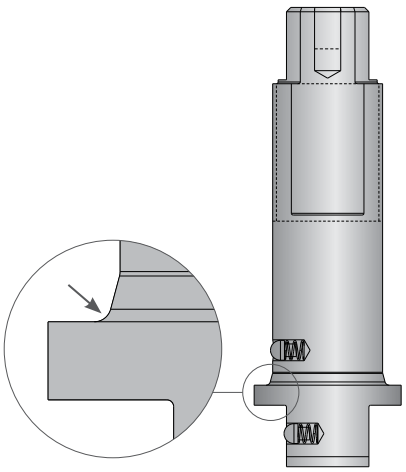

Stem design

Stem Seals

The valve trim - and the valve stem seal design in particular - determine the quality of a valve. The stem seal must perform two tasks: keep the media within the boundaries of the pressure vessel, and allow uninterrupted leak-free continuous open/closed quarter-turn rotation.

Unlike the valve body's static seal, the stem seal is subject to dynamic operation of the valve, as well as to side loads resulting from actuator misalignment or from the operator forcing the handle incorrectly. The valve trim typically comprises two Belleville springs assembled Face-to-Face, which preload the stem seal. This self- adjusting mechanism compensates for wear and pressure/temperature differentials - ensuring a leak-tight seal and extended service life. Habonim's trim design for heavy-duty service, such as high cycle applications, uses four or even six sets of Belleville springs so as to maintain preload over a longer operational cycle life. The Belleville springs are compressed by the stem nut, which is locked to prevent unintentional release during cycles.

Habonim's stem seal design, consisting of a live-loaded thrust bearing and anti-abrasion ring combined with a stem seal, significantly increases valve cycle life over conventional ball valves and extends the time between adjustments.

VALVE FEATURES

Stem Seals

Graphite-free fire safe HermetiX™ stem seal

The patented HermetiX™ stem seal is named for its distinctive "X"-shaped design. The flexible "X" shape creates a dynamic sealing arrangement so that, in the event of pressure buildup or side load, the HermetiX™ adjusts dynamically to prevent fugitive emissions. The result is a superior stem seal design compared with the conventional flat stem seals currently available on the market.

The HermetiX™ Fire-safe. This patented design includes a polymer based stem seal and a unique fire safe certified construction. The graphite-free stem seal, suitable for use in hazardous industries such as chemical, petrochemical, oil & gas, Food & Beverages is designed to operate for 500,000 cycles without refurbishment. The HermetiX™ fire safe valve offers the ultimate solution - an exclusive graphite free stem seal that eliminates the risk of graphite disintegration after prolonged valve cycles, protecting both line materials and air quality. The HermetiX™ fire safe valve meets the requirements of fire-safe API 607 / ISO 10497 standards, as well as the stringent ISO 15848-1 standard.

Features

- Prevents media contamination from graphite particles
- FDA, CE1935:2004 approved polymer or other materials is available upon request
- Fugitive emission certified to ISO 15848-1 and API 641
- Habonim patented design
- Designed to operate for 500,000 cycles without refurbishment
- Prevents media contamination from graphite particles
- Ensures uninterrupted production
- Increases site safety
- Anti-static as standard

No pressure Pressure build-up Side load

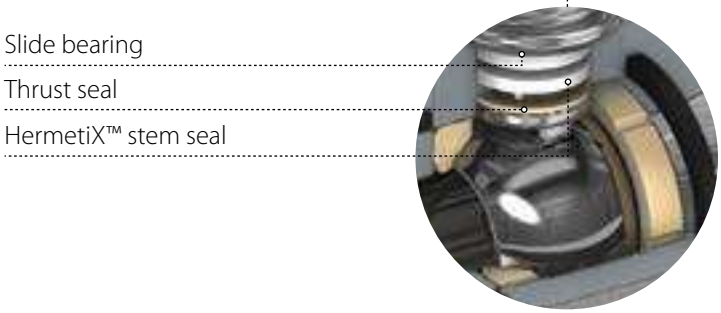

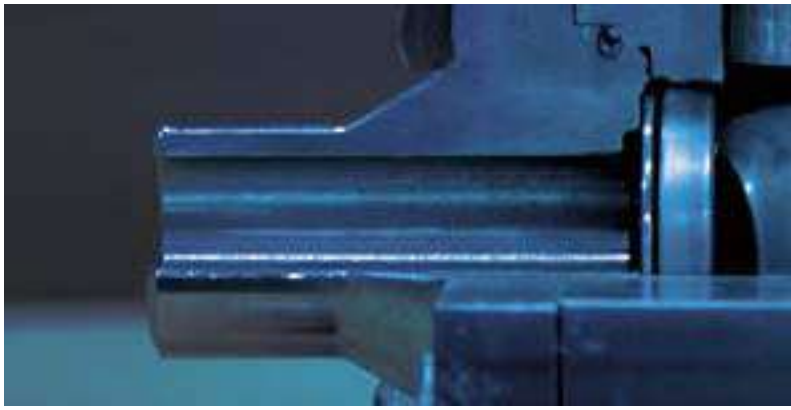

High Cycle (HC) Stem seal

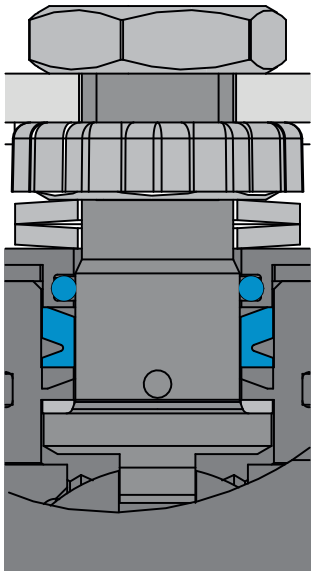

High cycle service is defined by Habonim engineering as continuous operation for more than one hour at a frequency greater than 1 cycle / 180 seconds.

When designing a valve for high cycle service parameters, such as heat dissipation due to friction of metallic and plastic parts, resistance to fatigue stress, and mean time between maintenance activities must be taken into consideration.

For high cycle applications Habonim recommends the use of valve stems made of high tensile material. The stem will be polished for a high degree of surface roughness. The stem thrust seal will always be made from highly wear-resistant plastic material. A Viton O-ring is inserted into a customized follower. The complete trim assembly is preloaded by a double or even triple Belleville spring stack. All of these design features give the valve a particularly long service life.

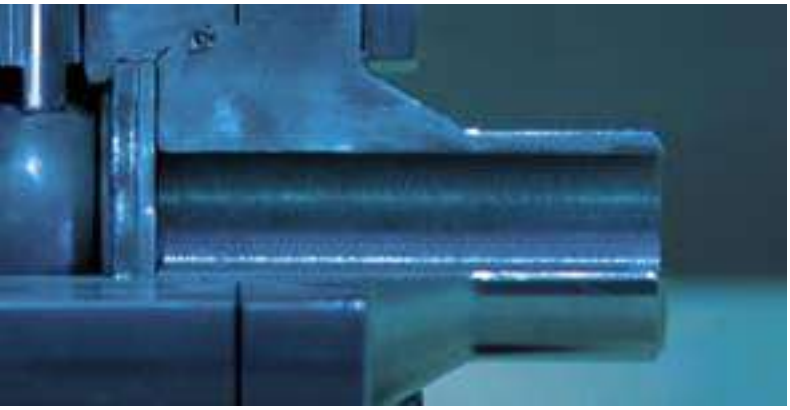

VALVE FEATURES

End Connections

Habonim offers a variety of end connections for its 3-piece valves, supporting the industry standard connections for piping in diverse applications and geographies.

TC/TCI/TCD

Tri-Clamp end - designed to ASME BPE (TC) standard, allows fast connection or removal of the valve from the line. Mainly used in the pharmaceutical and food & beverage industries.

BW

Buttweld end for various pipe schedule - designed to ASME B16.25, EN12627-4, BW code stands for buttweld schedule 40, for different pipe schedule BW should be followed by the relevant schedule number (5,10,80,160)

SW

Socket-weld end one piece solid cast designed to ASME B16.11 and EN 12760. Leaving a 1 mm gap (average) between the pipe end and the socket inner plan is a common welding practice to avoid internal stress due to thermal expansion during the welding process

XBW

Extended buttweld end for various pipe schedule - one piece solid cast - special design for in-line welding save labor cost and keep the integrity of the product factory tested.

XSW

Extended Socket-weld end one piece solid cast - special design for in-line welding save labor cost and keep the integrity of the product 'factory tested'

BWO / BWI / BWD

Buttweld end for various tube standards - designed to ASME BPE (BWO), ISO 1127 (BWI) and DIN 11850 (BWD). The length of this end doesn't allow the use of orbital welding.

ETO / ETI / ETD

Extended buttweld end for various tube standards - designed to ASME BPE (ETO), ISO 1127 (ETI) and DIN 11850 (ETD). One piece solid cast with sufficient length to allow the use of orbital welding.
Habonim ETD end connections are designed in accordance to EN10357 – Series A.
Habonim ETI end connections are designed in accordance to EN10357 – Series C.
Dimensions of the end-connections tube ends are suitable to be welded on tubes that meet this standard.
For other tube sized ends please contact a Habonim representative.

Size	Dimensions - mm (inches)					
	A	B	C	D	F	H
02	9.9(25/64)	7/16-20	7.1(.28)	12.7(.28)	4.8(.19)	2.8(.109)
03	13.1(33/64)	9/16-18	9.6(.38)	9.6(.38)	7.9(.31)	5.2(.203)
06	19.1(3/4)	13/16-16	11.1(.44)	11.1(.44)	12.7(.50)	9.1(.359)
07	32.9(1.19/64)	3/4-14	12.7(.50)	12.7(.50)	16 (.63)	11.1(.438)
10	45.47(1.79)	1 3/8-12	20.6(.81)	20.6(.81)	22.4(.88)	14.3(.562)

Flanged			
150	ASME B16.5 #150 RF	PN16	EN1092 PN16 RF
300	ASME B16.5 #300 RF	PN40	EN1092 PN40 RF
600	ASME B16.5 #600 RF	PN63	EN1092 PN63 RF
900	ASME B16.5 #900 RF	PN100	EN1092 PN100 RF
		PN160	EN1092 PN160 RF

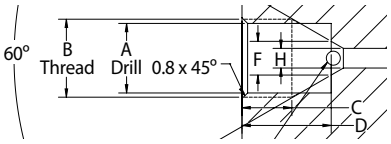

CTM

Coned and Threaded type female connection to be used with Coned & Threaded medium-pressure tubing and connection components.
Female connection geometry and sizes per the above.

150/300/600/900 | PN16/40/63/100/160

Raised Face flange ends designed to ASME B16.5 or EN1092 for a variety of pressure classes.
Valve Face To Face sizes are per Habonim catalog data only.

NPT / BSPT / DIN2999 / DIN3852

Female thread end designed to ASME B1.20.1 NPT
EN 10226-1 BSPT/DIN2999/DIN3852 and more

MNPT / MBSPT

Male thread end designed to ASME B1.20.1 NPT
EN 10226-1 BSPT/DIN2999/DIN3852 and more

LL / LM

Compression ends for metric (code LM followed by the tube OD in mm) or imperial (code LL) tube dimensions. mainly used in instrumentation services, with sizes up to 1" (DN25)

Grayloc©

Grayloc© compatible hub designed to fit an opposite hub for an easy low or high pressure connection Using a self-energized seal (Grayloc© is a registered trademark of Grayloc Products, L.L.C.)

VALVE FEATURES

Handles

A valve handle is the interface between the operator's hand and the valve trim. Habonim's handles are designed for safe operation, with a firm and comfortable grip. To facilitate ease of operation, the handle length ensures that the maximum force required at the handle-end to apply the breakaway torque will never exceed 360 N (80 lbf). The handles are manufactured in a variety of technologies: casting, forging, punching, and laser cut and welding. The standard materials are zinc plated carbon steel and stainless steel. Habonim's range of handle designs addresses the diverse needs of multiple applications.

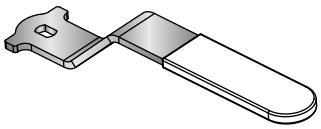

The 'SHARK' handle

Habonim's standard handle for valves with an ISO 5211 top pad.

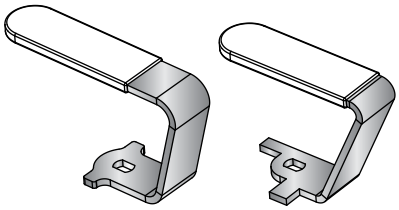

The 'SCORPION' handle

Habonim's special handle for confined spaces. There are two types to accommodate valves with or without an ISO 5211 top pad. To specify a valve with the SCORPION handle add the '-SCRP' suffix to the valve code.

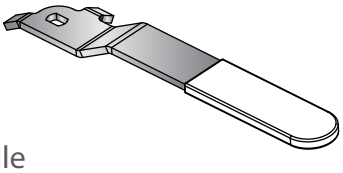

The 'POINTER' handle

Habonim's standard handle for valves without an ISO5211 top pad.

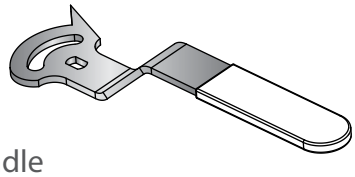

The 'ADJUSTABLE' handle

Habonim's special handle for manually controlled valves. It is supplied as part of a kit that includes a lock-in-place mechanism and a mirror-polished scale for clear identification of the valve's angular position. To specify a valve with the ADJUSTABLE handle add the '-ADJ' suffix to the valve code.

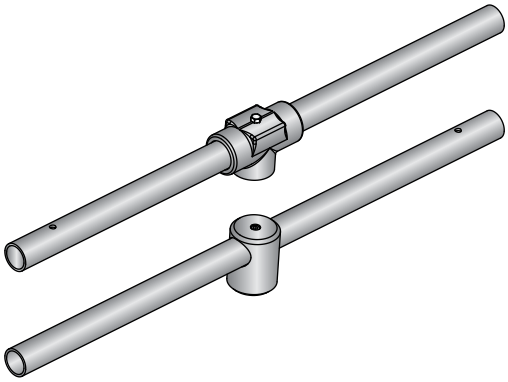

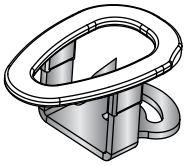

The 'OVAL' handle

Habonim's special handle designed to avoid unintentional movement of the valve handle. It is also used in confined spaces where the handle must not protrude beyond the valve's Face-to-Face plate. To specify a valve with the OVAL handle add the '-OVL' suffix to the valve code.

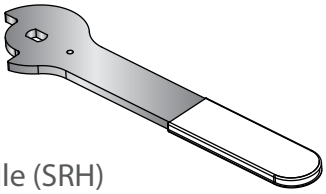

The Spring Return Handle (SRH)

An extra thick handle design to withstand the severe impact during valve closing. This handle is part of the SRH unit.

Habonim's standard handle for large valves (2½" and above)

Habonim's standard handle for large (2½" and above) cryogenic, high pressure and metal-seated valves, and for large (3" and above) standard valves. It provides a firm grip and smooth operation. The maximum force required at the handle-end to apply the breakaway torque shall not exceed 360 N (80 lbf). Habonim supplies valves with 2½" standard port and above for manual operation with handles attached to or packed with the valve. (with the exemption of 47 series which is for 3" standard port and above). If the valve is to be automatically actuated, Habonim removes the handle and prepares the valve stem seal accordingly. To specify a valve prepared for automated actuation, add the '-BS' (bare shaft) suffix to the valve code. The '-BS' suffix does not apply to valves size up to and including 2.

SANITARY VALVES

General 38

Floating Ball

ASME BPE | 3 Piece 40

3 Piece 49

3A | 3 Piece 55

ASME BPE Flush Tank | 3 Piece 59

SANITARY VALVES

General

Habonim's Sanitary product line valves are subject to the general Habonim valves design, materials, practices, methodologies and certifications – for more information, see Valves General chapter.

Habonim Sanitary valves are equipped (in some series) with the Total HermetiX integrity package for superior sealing, safety and environmental care.

Sanitary Valve

Habonim's line of Sanitary ball valves for the pharmaceutical, bioprocessing, food and beverage industries is in wide use in leading production and research facilities.

Features

Materials

- FDA and USP Class VI compliant polymers or elastomers are used in the series.
- Controlled ferrite cast or forged bar materials are used and polished (in some series) to avoid rouging on austenitic stainless-steel surfaces and corrosion attack on welding areas.
- Electro-polished surface finishes are available upon request for some series.
- EC 1935 - as an option

Design

- Purge and drain ports are available upon request to facilitate CIP/SIP operation.
- Diverter and various multiport configurations are available upon request.

Reference standards

- 48 and R48 series valves are designed and tested according to ASME BPE standard.
- EC 1935 compliance – as an option.

Quick Selection Table

Total Hermetix™ | **Port:** Standard Port Full Port Tube Size | **End Connections:** Threaded Clamp Welded

Ordering Code

	Ball Valve	Design Type	OC	Series	TH	Port	End Con.	Valve Size (Inches) ¼	⅜	½	¾	1	1¼	1½	2	2½	3	4	6
Temperature: -60°C - +260°C (-76 °F ÷ +500 °F)	Floating Ball	3 Piece	OC	48	Total Hermetix™	Standard Port	Threaded, Clamp, Welded	300							150				
			OC	Y47	Total Hermetix™	Standard Port	Threaded, Clamp, Welded		900							400			
			OC	L47	Total Hermetix™	Standard Port	Threaded, Clamp, Welded			300									
		Flush tank	OC	R48		Standard Port	Threaded, Clamp, Welded	300							150				

ASME Class				150	300	600	900	1500	2500	6000
Pressure Bar	-1*	0	16	20	50	100	150	250	400	1000
Pressure psi	-14*	0	290	290	725	1450	2175	3600	5800	15000

* Vacuum 10^{-6} Tor

Polishing and Electro-polishing (for 48 / 48R Series)

To minimize contamination and to avoid corrosion/rouging problems, inner surfaces which come into direct or indirect contact with the flow media are polished and, upon request, electro-polished.

For cast/forged valves the body, ball, seat retainer (2" size and above) and the end connections are polished internally. For bar stock valves, additional polishing is carried out the body and end connections outer surfaces.

When requested, electro-polishing is carried out on the body, ball, seat retainer (2" size and above) and end connections.

The standard line polishing level is 0.625 µ-m (25 µ-in) Ra max. Higher levels of surface finish up to 0.375 µ-m (15 µ-in) Ra max are available, including internal and external electro-polishing.

Habonim does not use Animal Derived Ingredients (ADI's) in its surface finishing processes.

Ra Reading for Metallic Contact Surfaces			
ASME BPE Surface designation	Ra Max.		Habonim
	µ-in.	µ-m	Code
SF1	20	0.51	G32
SF2*	25	0.64	G24

Mechanically Polished and Electropolished			
ASME BPE Surface designation	Ra Max.		Habonim
	µ-in.	µ-m	Code
SF4	15	0.38	E32
SF5	20	0.51	E24
SF6	25	0.64	E18

* SF2 is the 48/R48 series standard surface finish, no need to add 'G24' suffix

SANITARY VALVES

Cleaning and Assembling

Habonim's cleaning, assembly and inspection procedure for the Sanitary line ensures the cleanliness required by Bioprocessing, Pharmaceutical or Oxygen services.

Habonim uses a state of the art, environmentally friendly, alkaline-based automatic degreasing system with multiple stages of cleaning, rinsing and drying chambers to ensure that particles, grease, metal chips and other contamination hazards that can be introduced by a poor deburring process or shop dirt are removed thoroughly before the assembly process begins. Upon completion of the cleaning process, the valves are assembled in an oil free restricted area by qualified personnel who are specially trained to perform this task. The employees wear clean working clothes and latex gloves throughout the procedure. The equipment and tools are cleaned before use and the work surfaces are covered with a clean polyethylene sheet before performing the valve assembly.

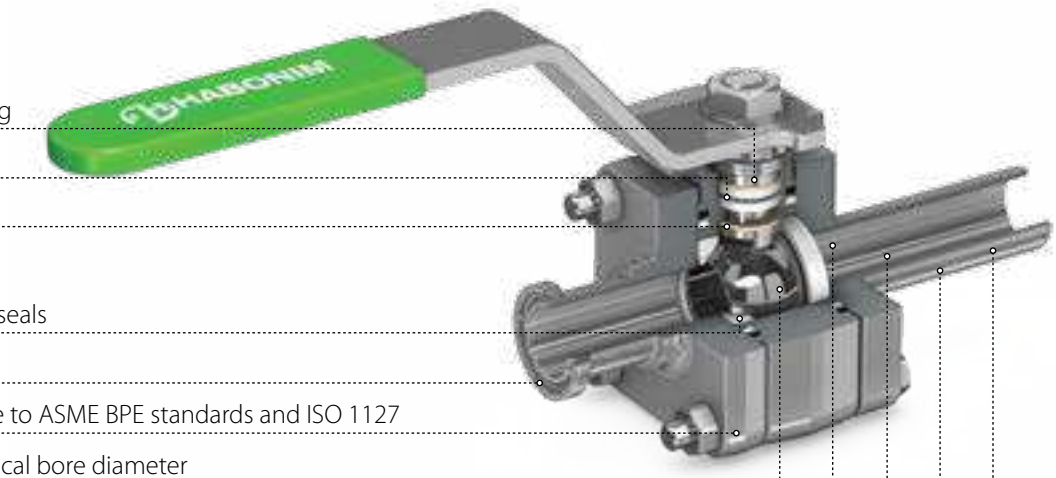

Durable polymer anti-abrasion ring

HermetiX™ TFM stem seal

Durable polymer thrust seal

FDA approved material seats and seals

Sanitary clamp end

Castings or forgings are applicable to ASME BPE standards and ISO 1127

End-to-End continuous and identical bore diameter

SF2 - Standard internal polishing level of 0.625 µ-m (25 µ-in) Ra max

Austenitic materials with controlled Sulfur 0.005% < S < 0.017 %

Extended ends for orbital welding

Austenitic forged material with Ferrite below 1%.

Austenitic cast materials with controled ferrite.

FLOATING BALL

ASME BPE
3 PIECE

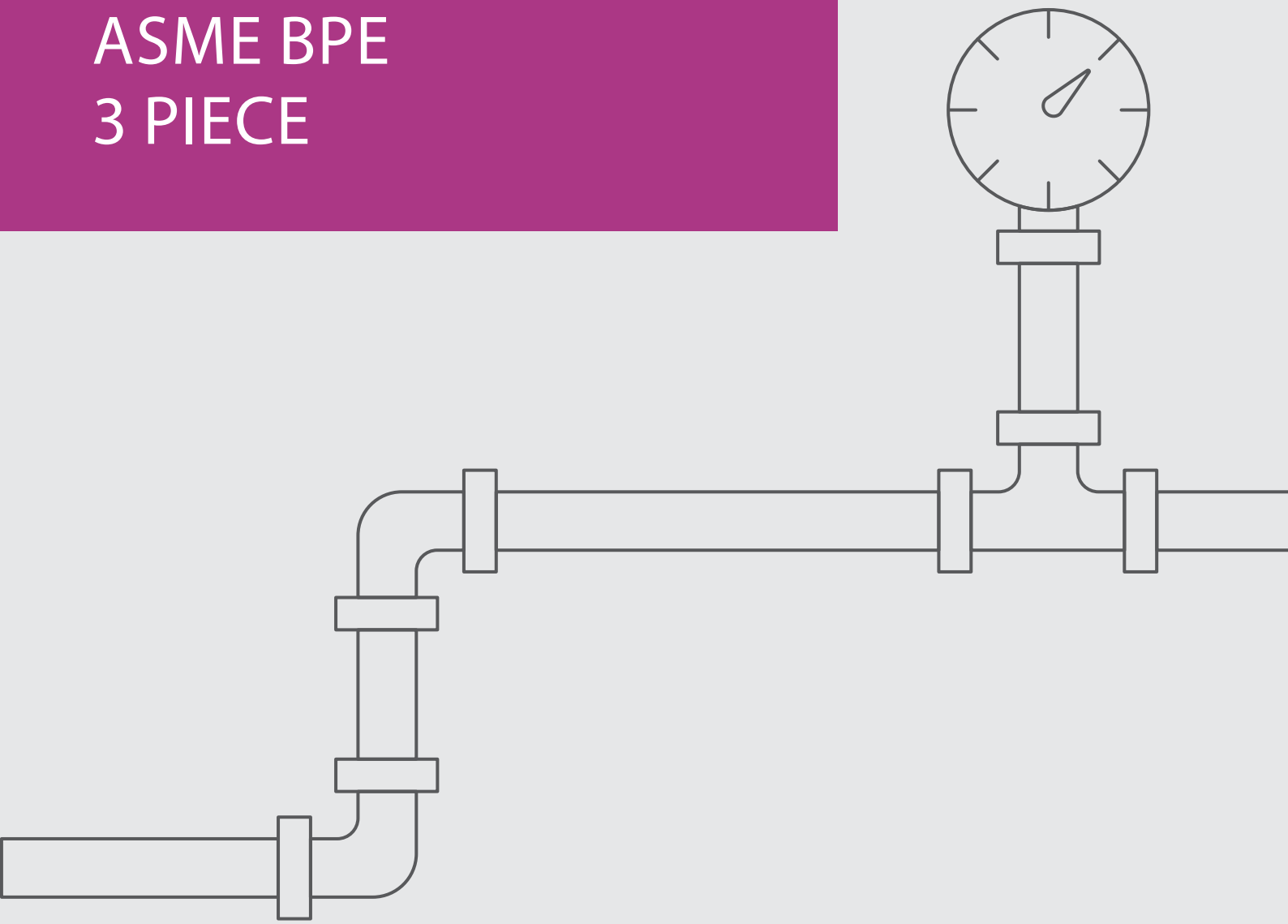

ASME BPE Floating Ball 3 Piece

Valve dimensions

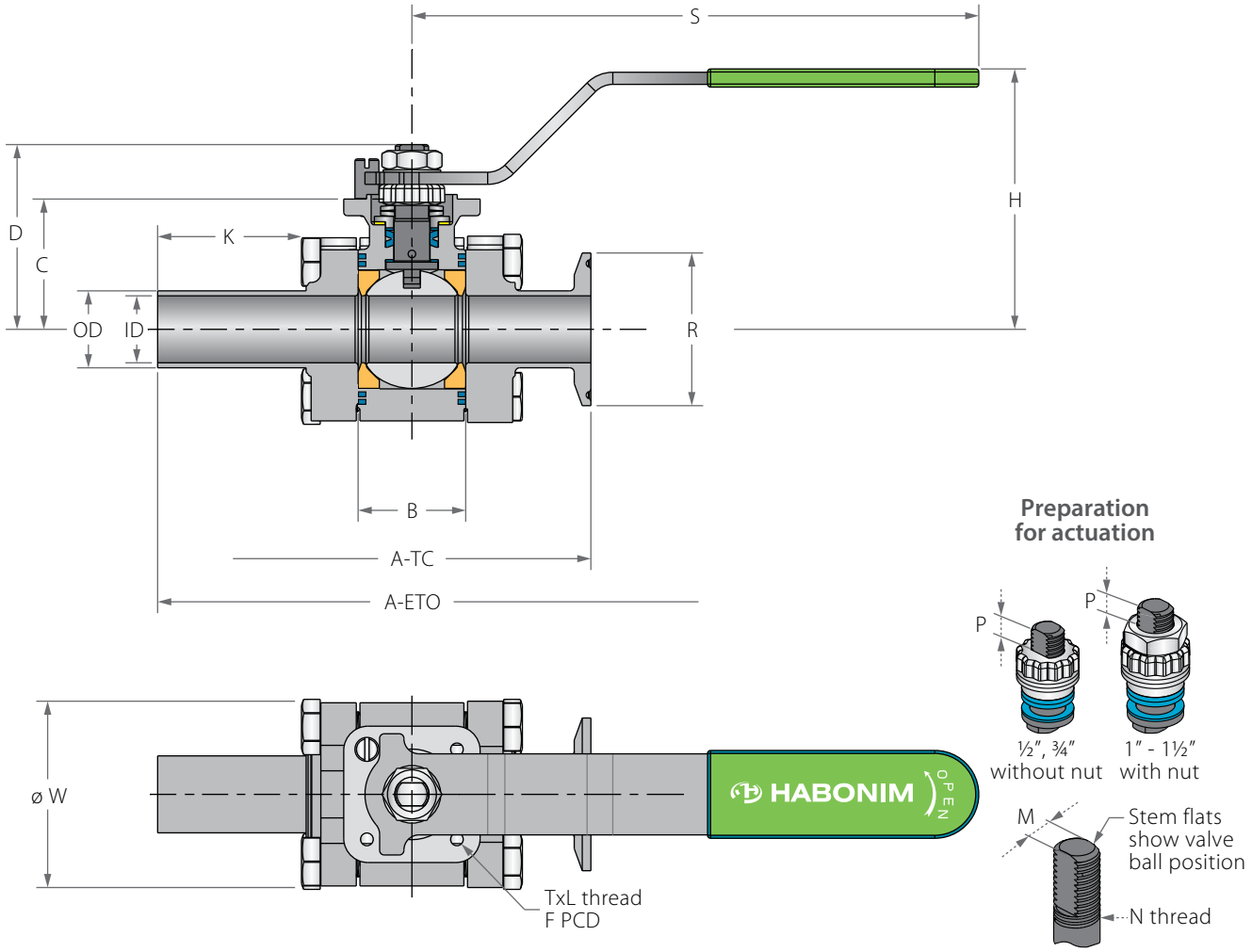

Valve dimensions

Tube size	Unit	OD	ID	A ETD	A TCD	B	C	D	H	K	S	W	R TCD	M	N	P	F		TxL	Weight kg/lb	Kv / Cv
DN15	mm	12.70	9.40	137.00	89.00	20.60	29.00	38.00	61.60	41.50	150.00	45.75	25	5.54	⅜" UNF	6.65	(F03)	36.00	M5X10	0.90	8
½"	inch	0.50	0.37	5.39	3.50	0.81	1.14	1.50	2.42	1.63	5.91	1.80	0.99	0.22		0.26		1.42		2.00	9
DN20	mm	19.05	15.75	147.00	102.00	24.60	36.00	45.00	67.90	43.90	150.00	52.10	25	5.54	⅜" UNF	6.65	(F03)	36.00	M5X10	1.00	29
¾"	inch	0.75	0.62	5.79	4.00	0.97	1.42	1.77	2.67	1.73	5.91	2.05	0.99	0.22		0.26		1.42		2.10	34
DN25	mm	25.40	22.10	168.00	118.00	35.50	43.50	61.00	84.80	43.90	187.00	60.45	50.40	7.54	7/16" UNF	7.40	(F04)	42.00	M5X10	1.70	53
1"	inch	1.00	0.87	6.61	4.65	1.40	1.71	2.41	3.34	1.73	7.36	2.38	1.98	0.30		0.29		1.65		3.80	62
DN40	mm	38.10	34.80	186.00	141.00	50.00	55.50	85.00	107.10	44.00	236.00	79.15	50.40	8.71	9/16" UNF	8.50	(F05)	50.00	M6X12	3.50	150
1½"	inch	1.50	1.37	7.31	5.57	1.97	2.19	3.35	4.22	1.73	9.29	3.12	1.98	0.34		0.33		1.97		7.70	175

ASME BPE Floating Ball 3 Piece

Components & materials

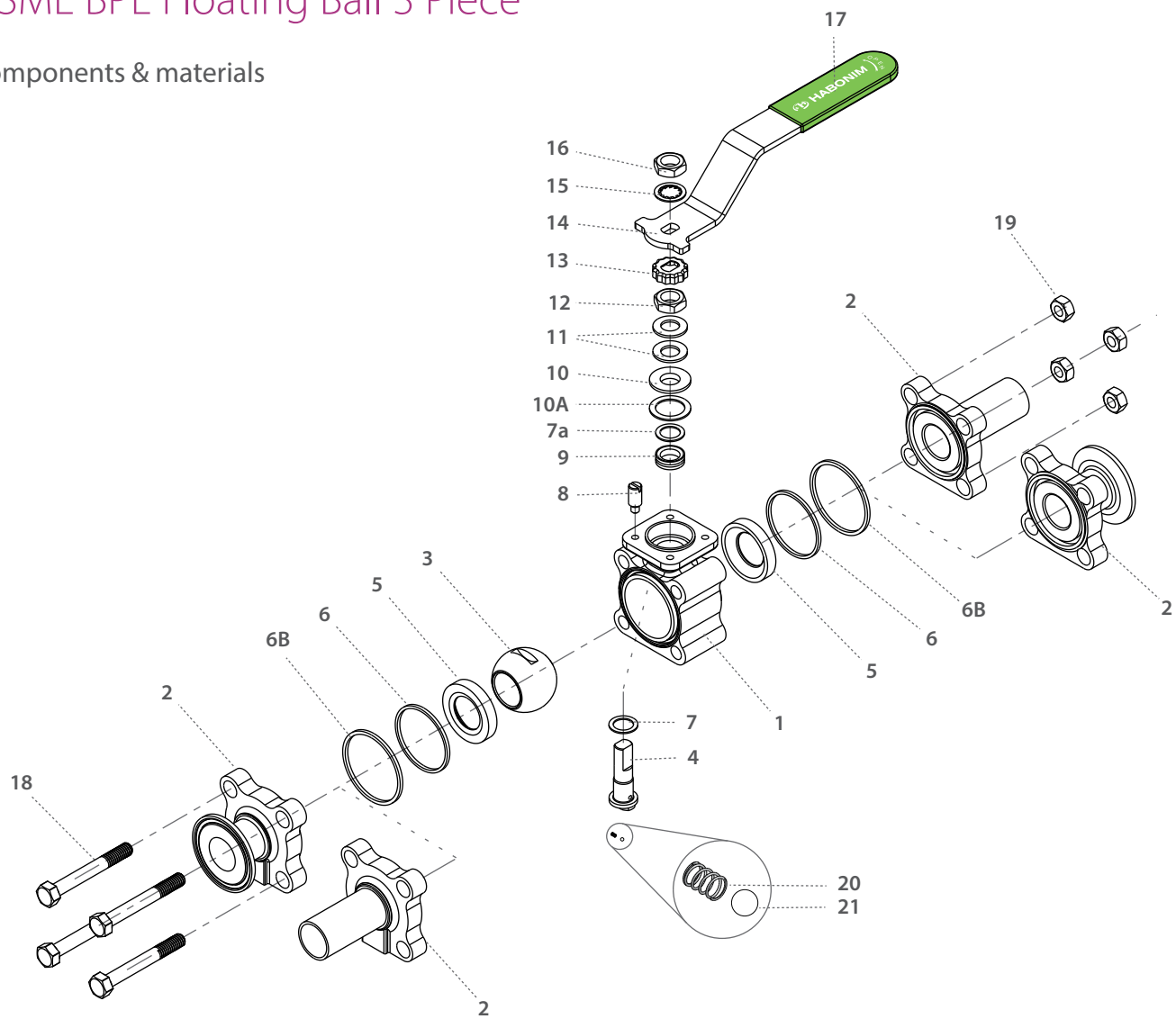

Item	Description	Material specification	Qty.
1	Body	Acc. Ordering Code	1
2	Ends	Acc. Ordering Code	2
3	Ball	Acc. Ordering Code	1
4	Stem	Acc. Ordering Code	1
5*	Seat	Acc. Ordering Code	2
6*	Body inner seal	PTFE	2
6B*	Body outer seal	Acc. Ordering Code	2
7*	Stem thrust seal	Virgin PEEK	1
7a*	Anti-abrasion ring	Virgin PEEK	1
8	Stop pin	S. Steel	1
9*	Stem seal	TFM	1
10	Follower	S. Steel	1
10A*	Slide bearing	S. Steel	1

Item	Description	Material specification	Qty.
11	Disc spring	S. Steel	2
12	Stem nut	S. Steel	1
13	Locking clip	S. Steel	1
14	Handle	S. Steel	1
15	Serrated washer	S. Steel	1
16	Handle nut	S. Steel	1
17	Sleeve	PVC	1
18	Body bolt	S. Steel	4
19	Body nut	S. Steel	4
20	Anti-static spring	S. Steel	1
21	Anti-static plunger	S. Steel	1
23	Tag (not shown)	S. Steel	1

* Repair kit components

ASME BPE Floating Ball 3 Piece

Valve dimensions

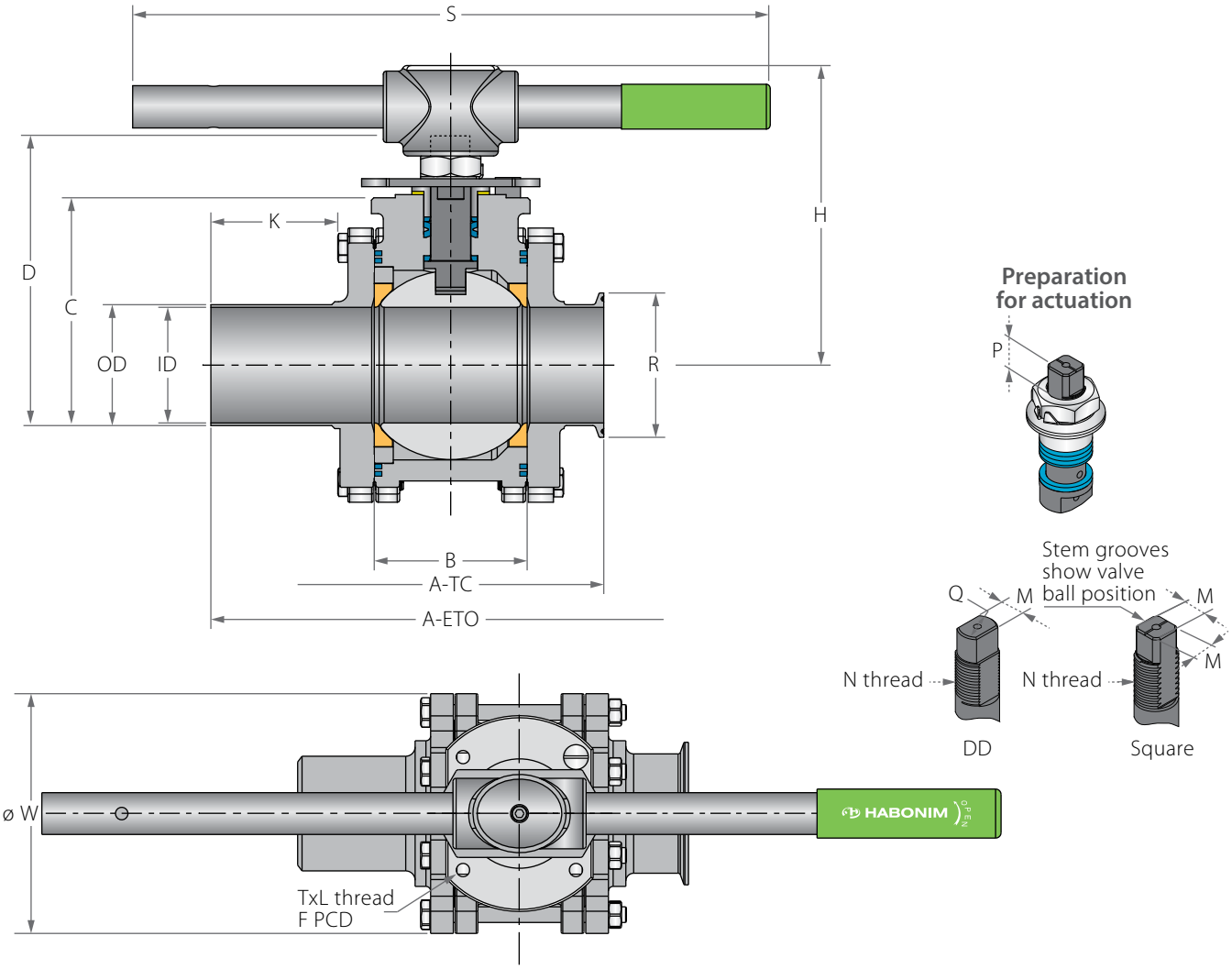

Tube size	Unit	OD	ID	A ETO	A TC	B	C	D	H	K	S	W	R TC	M	M-DD	N	P	F		TxL	Weight kg/lb	Kv Cv
DN50	mm	50.80	47.50	223.00	184.00	72.70	70.00	112.10	143.10	45.00	256.00	108.00	64.20	-	13.90	M20x2.5	14.60	(F07)	70.00	M8X12	9.40	410
2"	inch	2.00	1.87	8.77	7.23	2.86	2.76	4.41	5.63	1.77	10.08	4.25	2.53	-	0.55		0.57		2.76		20.80	480
DN65	mm	63.50	60.20	250.40	169.10	83.35	98.30	144.90	185.10	57.20	401.00	153.10	77.40	18.90	15.90	1" -14 UNS-2A	16.70	(F10)	102.00	M10X20	13.70	581
2½"	inch	2.50	2.37	10.00	6.66	3.28	3.87	5.70	7.29	2.25	15.79	6.03	3.05	0.74	0.63		0.66		4.02		30.30	680
DN80	mm	76.20	72.90	302.00	193.00	96.40	105.50	152.20	192.40	70.00	401.00	172.80	90.90	18.90	15.90	1" -14 UNS-2A	16.70	(F10)	102.00	M10X20	17.70	748
3"	inch	3.00	2.87	11.90	7.60	3.80	4.15	5.99	7.57	2.75	15.79	6.80	3.58	0.74	0.63		0.66		4.02		39.10	875
DN100	mm	101.60	97.38	317.50	236.20	123.00	124.00	170.60	210.80	61.00	619.00	216.80	118.90	18.90	15.90	1" -14 UNS-2A	16.70	(F10)	102.00	M10X20	31.30	1333
4"	inch	4.00	3.83	12.50	9.30	4.84	4.88	6.71	8.30	2.40	24.37	8.54	4.68	0.74	0.63		0.66		4.02		69.20	1560
DN150	mm	152.40	146.86	460.00	328.00	180.00	179.00	248.50	303.00	82.00	916.50	326.80	166.50	28.45	23.75	1½"-12 UNF-1A	26.20	(F12)	125.00	M12x20	78.00	3218
6"	inch	6.00	5.78	18.11	12.91	7.09	7.05	9.78	11.93	3.23	36.08	12.87	6.56	1.12	0.94		1.03		4.92		172.00	3765

ASME BPE Floating Ball 3 Piece

Components & materials

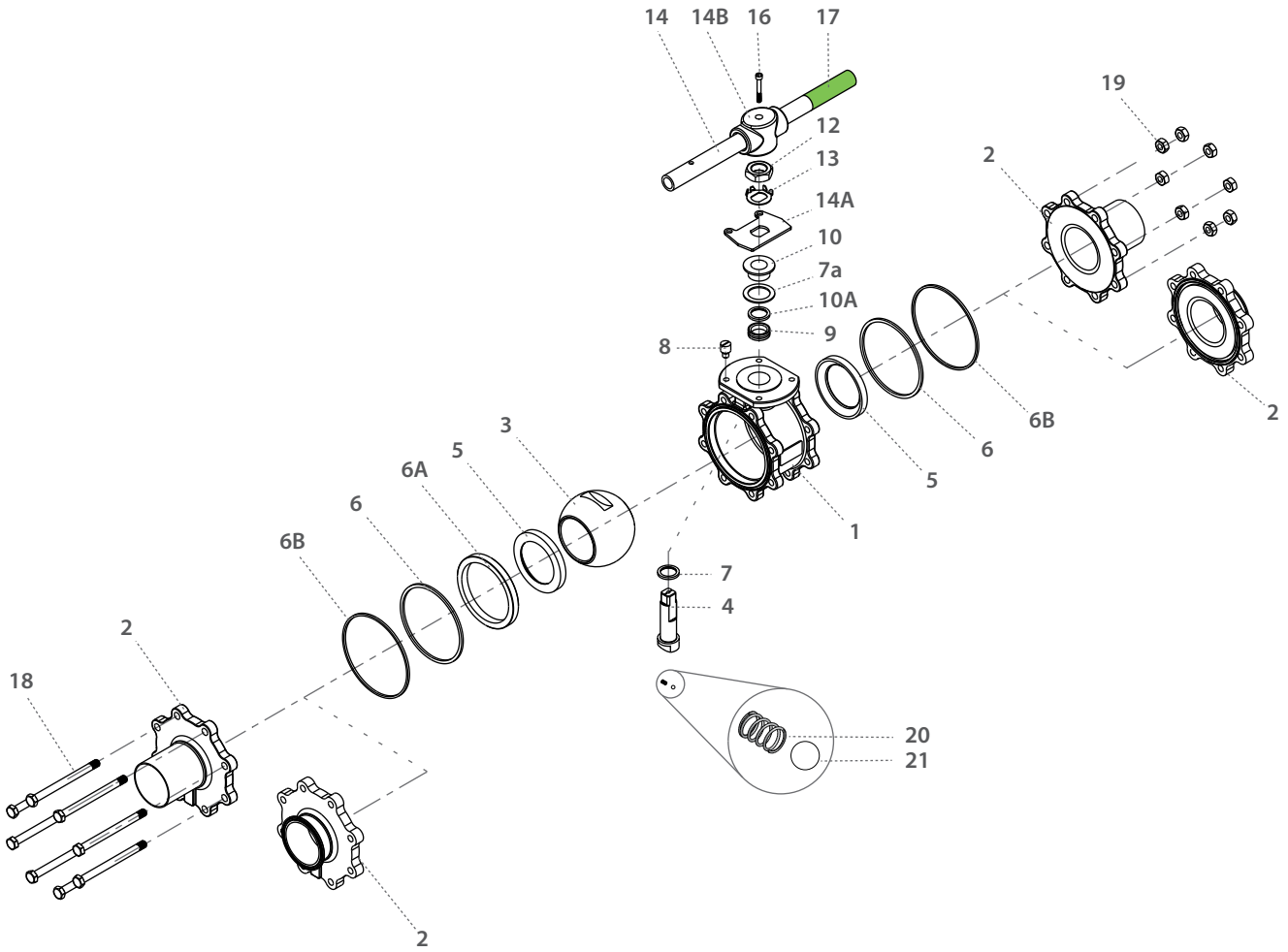

Item	Description	Material specification	Qty.
1	Body	Acc. Ordering Code	1
2	Ends	Acc. Ordering Code	2
3	Ball	Acc. Ordering Code	1
4	Stem	Acc. Ordering Code	1
5*	Seat	Acc. Ordering Code	2
6*	Body seal	PTFE	2
6A	Support ring	S. Steel	1
6B*	Body outer seal	Acc. Ordering Code	2
7*	Stem thrust seal	Virgin PEEK	1
7a*	Anti-abrasion ring	Virgin PEEK	1
8	Stop pin	S. Steel	1
9*	Stem seal	TFM	1
10	Follower	S. Steel	1
10A*	Slide bearing	S. Steel	1

Item	Description	Material specification	Qty.
11	Disc spring	S. Steel	2
12	Stem nut	S. Steel	1
13	Tab lock washer	S. Steel	1
14	Handle	S. Steel	1
14A	Stop plate	S. Steel	1
14B	Wrench head	S. Steel	1
16	Wrench bolt	S. Steel	1
17	Sleeve	PVC	1
18	Body bolt	S. Steel	8-12
19	Body nut	S. Steel	8-12
20	Anti-static spring	S. Steel	1
21	Anti-static plunger	S. Steel	1
23	Tag (not shown)	S. Steel	1

* Repair kit components

ASME BPE Floating Ball 3 Piece - DIN 11850 tube size

Valve dimensions - DIN 11850 sizes

DIN 11850 sizes	Unit	OD	ID	A ETD	A TCD	B	C	D	H	K	S	W	R TCD	M	N	P	F1	F2	TxL	Weight kg/lb	Kv Cv
DN10	mm	13.00	10.00	100.00	90.00	20.60	29.00	38.00	46.30	41.50	115.00	69.00	34.00	5.54	⅜" UNF	7.20	-	32.00	M5X6	1.00	9
⅜"	Inch	0.51	0.39	3.94	3.54	0.81	1.14	1.50	1.82	11.63	4.53	2.72	1.34	0.22		0.28	-	1.26		2.20	10
DN15	mm	19.00	16.00	110.00	95.00	24.60	36.00	45.00	49.40	44.00	115.00	69.00	34.00	5.54	⅜" UNF	7.20	15.00	34.00	M5X6	1.30	30
½"	Inch	0.75	0.63	4.33	3.74	0.97	1.42	1.77	1.94	1.73	4.53	2.72	1.34	0.22		0.28	0.59	1.34		2.85	35
DN20	mm	23.00	20.00	120.00	110.00	31.70	36.00	45.00	61.00	44.00	146.00	79.00	34.00	5.54	⅜" UNF	7.20	20.00	36.00	M5X8	2.20	48
¾"	Inch	0.91	0.79	4.72	4.33	1.25	1.42	1.77	2.40	1.73	5.75	3.11	1.34	0.22		0.28	0.79	1.42		4.85	56
DN25	mm	29.00	26.00	180.00	130.00	41.30	43.50	61.00	85.00	44.00	187.00	94.00	50.50	7.54	7/16" UNF	7.20	29.70	29.70	M5X8	2.80	97
1"	Inch	1.14	1.02	7.09	5.12	1.63	1.71	2.41	3.35	1.73	7.36	3.70	1.99	0.30		0.28	1.17	1.17		6.20	114
DN32	mm	35.00	32.00	190.00	140.00	48.40	55.50	85.00	99.00	46.00	237.00	99.00	50.50	7.54	7/16" UNF	8.00	35.35	35.35	M6X10	4.40	145
1¼"	Inch	1.38	1.26	7.48	5.51	1.91	2.19	3.35	3.90	1.73	9.33	3.90	1.99	0.30		0.31	1.39	1.39		9.70	170
DN40	mm	41.00	38.00	200.00	150.00	56.30	48.25	77.75	103.00	46.00	237.00	109.00	50.50	8.71	9/16" UNF	8.00	35.35	35.35	M6X10	8.00	168
1½"	inch	1.61	1.50	7.87	5.91	2.22	1.90	3.05	4.06	1.73	9.33	4.29	1.99	0.34		0.31	1.39	1.39		17.60	196

DIN 11850 sizes	Unit	OD	ID	A ETD	A TCD	B	C	D	H	K	S	W	R TCD	M	M-DD	N	P	F1	F2	TxL	Weight kg/lb	Kv Cv
DN50	mm	53.00	50.00	100.00	90.00	72.70	70.00	112.10	129.30	45.00	401.00	139.00	64.00	-	13.90	M20X2.5	14.60	70.00	49.50	M8X12	12	385
2"	inch	2.09	1.97	3.94	3.54	2.86	2.76	4.41	5.09	1.77	15.79	5.47	2.52	-	0.57		0.57	2.76	1.95		25	450
DN65	mm	70.00	66.00	110.00	95.00	83.40	98.30	144.90	169.20	57.20	401.00	164.00	91.00	18.90	15.90	1"-14	16.70	102.00	100.00	M10X20	19	581
2½"	Inch	2.76	2.60	4.33	3.74	3.28	3.87	5.70	6.66	2.25	15.79	6.46	3.58	0.74	0.63	UNS-2A	0.66	4.02	3.94		41	680
DN80	mm	85.00	81.00	120.00	110.00	112.00	105.50	152.20	184.50	70.00	401.00	199.00	106.00	18.90	15.90	1"-14	16.70	102.00	120.00	M10X20	30	1060
3"	inch	3.35	3.19	4.72	4.33	4.41	4.15	5.99	7.26	2.75	15.79	7.83	4.17	0.74	0.63	UNS-2A	0.66	4.02	4.72		66	1240
DN100	mm	104.00	100.00	180.00	130.00	123.00	179.00	248.50	193.50	61.00	401.00	224.00	119.00	18.90	15.90	1"-14	16.70	102.00	140.00	M10X20	40	1402
4"	Inch	4.09	3.94	7.09	5.12	4.84	7.05	9.78	7.62	2.40	15.79	8.82	4.69	0.74	0.63	UNS-2A	0.66	4.02	5.51		88	1640

ASME BPE Floating Ball 3 Piece - ISO 1127 tube size

Valve dimensions - ISO 1127 sizes

ISO 1127 sizes	Unit	OD	ID	A ETD	A TCD	B	C	D	H	K	S	W	R TCD	M	N	P	F		TxL	Weight kg/lb	Kv Cv
DN10	mm	17.20	14.00	147.00	89.00	24.60	35.30	44.30	67.90	47.00	150.00	54.00	25.00	5.54	⅜" UNF	6.50	(F03)	36.00	M5X6	1.00	9
⅜"	Inch	0.68	0.55	5.79	3.50	0.97	1.39	1.74	2.67	1.85	5.91	2.13	0.98	0.22		0.26		1.42		2.20	10
DN15	mm	21..30	18.10	164.00	118.00	31.70	38.20	55.70	86.00	49.00	187.00	61.00	50.50	7.50	7/16" UNF	5.50	(F04)	42.00	M5X10	1.75	30
½"	Inch	0.84	0.71	6.46	4.65	1.25	1.50	2.19	3.39	1.93	7.36	2.40	1.99	0.30		0.22		1.65		3.85	35
DN20	mm	26.90	23.70	168.00	118.00	35.50	43.50	61.00	89.00	49.00	187.00	61.00	50.50	7.50	7/16" UNF	7.20	(F04)	42.00	M5X10	2.00	48
¾"	Inch	1.06	0.90	6.61	4.65	1.40	1.71	2.40	3.50	1.93	7.36	2.40	1.99	0.30		0.28		1.65		4.40	56
DN25	mm	33.70	29.70	186.00	141.00	50.00	51.50	81.00	105.00	49.00	236.00	80.00	50.50	8.67	9/16" UNF	8.00	(F05)	50.00	M6X12	4.00	98
1"	Inch	1.33	1.17	7.32	5.55	1.97	2.03	3.19	4.13	1.93	9.29	3.15	1.99	0.34		0.31		1.97		8.80	114
DN32	mm	42.40	38.40	200.00	-	56.30	48.20	77.70	100.00	49.00	236.00	91.00	64.00	8.67	9/16" UNF	8.00	(F05)	50.00	M6X12	5.00	145
1¼"	Inch	1.67	1.51	7.87	-	2.22	1.90	3.06	3.94	1.93	9.29	3.58	2.52	0.34		0.31		1.97		11.00	170

ISO 1127 sizes	Unit	OD	ID	A ETD	A TCD	B	C	D	H	K	S	W	R TCD	M	M-DD	Q	N	P	F		TxL	Weight kg/lb	Kv Cv
DN40	mm	48.30	44.30	223.00	184.00	72.70	70.00	112.10	143.10	45.00	401.00	108.00	64.00	-	13.90	20.00	M20	14.00	(F07)	70.00	M8X10	9.50	168
1½"	inch	1.90	1.74	8.78	7.24	2.86	2.76	4.41	5.63	1.77	15.79	4.25	2.52	-	0.55	0.79		0.55		2.76		20.90	196
DN50	mm	60.30	56.30	250.40	169.10	83.35	98.30	144.90	185.10	57.20	401.00	139.70	77.50	18.90	15.90	22.70	1"-14 UNF-2A	16.70	(F10)	102.00	M10X12	14.00	385
2"	inch	2.37	2.22	9.86	6.66	3.28	3.87	5.70	7.29	2.25	15.79	5.50	3.05	0.74	0.63	0.89		0.66		4.02		30.80	450
DN65	mm	76.10	72.10	302.00	193.00	96.40	105.50	152.20	192.40	70.00	40.10	160.00	91.00	18.90	15.90	22.70	1"-14 UNF-2A	16.70	(F10)	102.00	M10X12	17.70	581
2½"	Inch	3.00	2.84	11.89	7.60	3.80	4.15	5.99	7.57	2.76	1.58	6.30	3.58	0.74	0.63	0.89		0.66		4.02		38.94	680
DN80	mm	88.90	84.30	349.00	236.00	108.80	114.10	160.70	200.00	80.00	600.00	177.00	106.00	18.90	15.90	22.70	1"-14 UNF-2A	16.70	(F10)	102.00	M10X12	26.00	106
3"	Inch	3.50	3.32	13.74	9.29	4.28	4.49	6.33	7.87	3.15	23.62	6.97	4.17	0.74	0.63	0.89		0.66		4.02		57.20	1240

ASME BPE Floating Ball 3 Piece - Ordering Code System

"Mandatory option" options are marked with green background | "Standard offer" options are marked with light green background

1	2	3	4	5	6	7	8	9	10	11	12	13	14	15	16	17	18	19	20	21	22	23	24	25	26	.	30
1	0				F	4	8	G	-	6	6	6	6	A	A	G	/	E	T	O		-					
Size		Features				Series		Design		Body/End material		Ball/Stem material		Seat	Inner Seal	Outer Seal		End Connection					Special features				

Size (1-2)		
Code	inch	mm
02	¼"	8
03	⅜"	10
05	½"	15
07	¾"	20
10	1"	25
12	1¼"	32
15	1½"	40
20	2"	50
25	2½"	65
30	3"	80
40	4"	100
60	6"	150

Features (3-6)	
F	Fire Safe
D	Diverter, Bottom entry
S	Diverter, Side entry
Q	Cavity filler seats

Series (7-8)	
48	ASME BPE Clean valves

Design (9)	
G	Total HermetiX Integrity package - FDA compliant

Body/Ends material (11-12)	
6	CF3M
P	S. St. 316L Forged
3	S. St. DIN 1.4435 Forged
W	ALLOY-C22

Ball material (13)	
6	ASTM A479 S. Steel316L
W	ALLOY-C22

Stem material (14)	
6	ASTM A479 S. Steel316L
W	ALLOY-C22

Seat material (15)	
A	TFM
L	Virgin PEEK

Inner Seal Material (16)	
A	TFM

Outer Seal Material (17)	
A	TFM
G	Expanded graphite

End connections (19-23)	
Welded	
ETO	Extended tube OD
ETI	Extended buttweld ISO 1127
ETD	Extended buttweld DIN 11850
Clamp	
TC	Tri-Clamp

Special Features (24-30)	
G32	ASME BPE surface designation SF1 - Internal polishing level of 0.51 µ-m, 20 µ-in Ra max.
E24	ASME BPE surface designation SF5 - Internal polishing & EP level of 0.51 µ-m, 20 µ-in Ra max.
E32	ASME BPE surface designation SF4 - Internal polishing & EP level of 0.38 µ-m, 15 µ-in Ra max.
B	Valve made from rolled bar

FLOATING BALL

3 PIECE

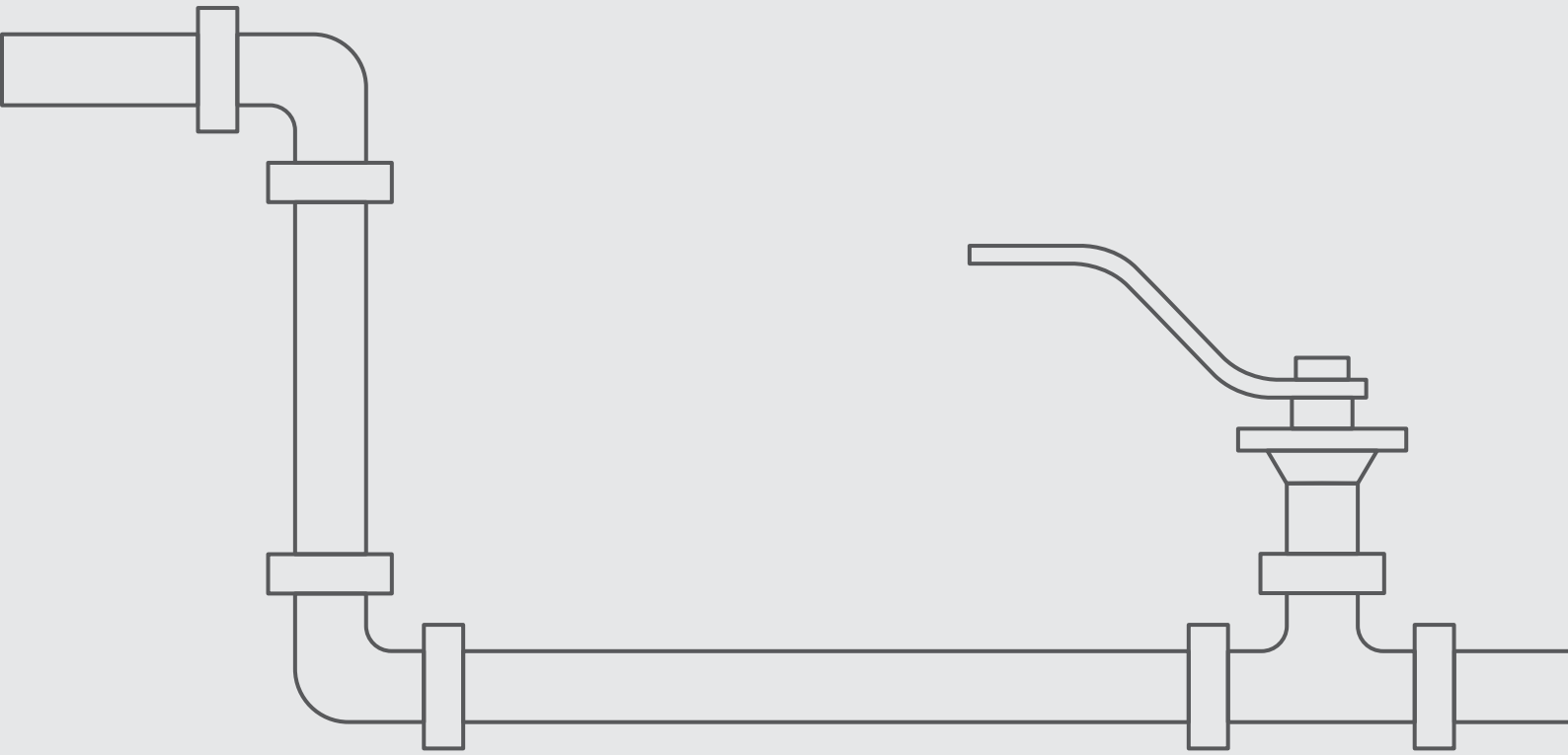

ISO 1127 / DIN 11850 Floating Ball 3 Piece

Valve dimensions

Habonim ETD end connections are designed in accordance to EN10357 – Series A.

Habonim ETI end connections are designed in accordance to EN10357 – Series C.

Dimensions of the end-connections tube ends are suitable to be welded on tubes that meet this standard.

For other tube sized ends please contact a Habonim representative.

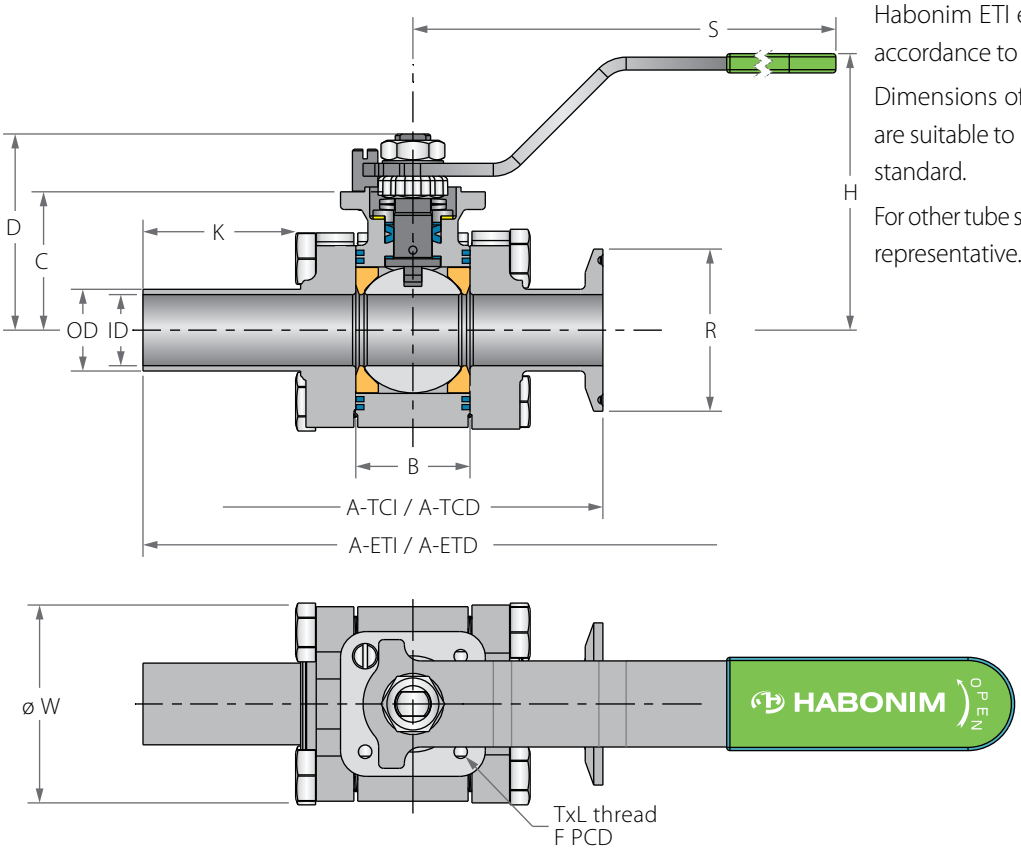

Preparation for actuation

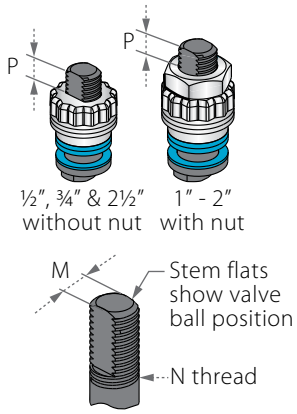

ISO 1127 Tube Sized

Std. port	Unit	Ball port	Pipe ID	Pipe OD	A ETI	A TCI	B	C	D	H	S	W	M	N	P	F		TxL	Weight kg/lb	Kv Cv
DN10	mm	14.30	14.00	17.20	146.50	101.50	24.50	31.40	40.30	63.90	150.00	53.70	5.54	⅜ UNF	6.65	(F03)	36.00	M5X10	0.80	10
⅜"	inch	0.56	0.55	0.68	5.76	3.99	0.97	1.24	1.59	2.52	5.91	2.11	0.22		0.26		1.42		1.77	12
DN15	mm	15.75	18.10	21.30	146.60	102.00	24.60	36.00	45.00	67.90	150.00	52.10	5.54	⅜ UNF	6.65	(F03)	36.00	M5X10	1.00	29
½"	inch	0.62	0.71	0.84	5.77	4.00	0.97	1.42	1.77	2.67	5.91	2.05	0.22		0.26		1.42		2.10	34
DN20	mm	22.10	23.70	26.90	167.8	118.00	35.50	43.50	61.00	84.80	187.00	60.45	7.54	⅜ UNF	7.40	(F04)	42.00	M5X10	1.70	53
¾"	inch	0.87	0.93	1.06	6.60	4.65	1.40	1.71	2.41	3.34	7.36	2.38	0.30		0.29		1.65		3.80	62
DN25	mm	25.40	29.70	33.70	179.30	133.70	41.30	42.70	60.20	84.10	187.00	71.70	7.54	7/16 UNF	7.40	(F04)	42.00	M5X10	2.50	49
1"	inch	1.00	1.17	1.33	7.05	5.26	1.62	1.68	2.37	3.31	7.36	2.82	0.30		0.29		1.65		5.53	57
DN32	mm	38.10	38.40	42.40	200.30	158.90	56.30	48.30	77.80	101.80	237.00	96.90	8.71	7/16 UNF	8.50	(F05)	50.00	M6X12	4.50	102
1¼"	inch	1.50	1.51	1.67	7.88	6.25	2.22	1.90	3.06	4.01	9.33	3.82	0.34		0.33		1.97		9.95	118
DN40	mm	38.10	44.30	48.30	200.30	158.90	56.30	48.30	77.80	101.80	237.00	96.90	8.71	9/16 UNF	8.50	(F05)	50.00	M6X12	4.50	102
1½"	inch	1.50	1.74	1.90	7.88	6.25	2.22	1.90	3.06	4.01	9.33	3.82	0.34		0.33		1.97		9.95	118
DN50	mm	50.80	56.30	60.30	232.60	213.00	72.60	70.00	88.10	115.10	237.00	108.00	8.71	9/16 UNF	13.50	(F07)	70.00	M8X12	9.50	208
2"	inch	2.00	2.22	2.37	9.15	8.38	2.86	2.76	3.47	4.53	9.33	4.25	0.34		0.53		2.76		21.00	241

DIN 11850 Tube Sized

Std. port	Unit	Ball port	Pipe ID	Pipe OD	A ETD	A TCD	B	C	D	H	S	W	M	N	P	F		TxL	Weight kg/lb	Kv Cv
DN10	mm	11.15	10.00	13.00	140.60	88.80	20.60	29.00	37.9	61.50	150.00	47.00	5.54	⅜ UNF	6.65	(F03)	36.00	M5X10	0.60	2.6
⅜"	inch	0.44	0.39	0.51	5.53	6.49	0.81	1.14	1.49	2.42	5.91	1.85	0.22		0.26		1.42		1.33	3.0
DN15	mm	15.75	16.00	19.00	146.60	102.00	24.60	36.00	45.00	67.90	150.00	52.10	5.54	⅜ UNF	6.65	(F03)	36.00	M5X10	1.00	29
½"	inch	0.62	0.63	0.75	5.77	4.00	0.97	1.42	1.77	2.67	5.91	2.05	0.22		0.26		1.42		2.10	34
DN20	mm	20.60	20.00	23.00	164.10	114.30	31.70	38.10	55.60	79.40	187.00	63.70	7.54	⅜ UNF	7.40	(F04)	42.00	M5X10	1.60	28
¾"	inch	0.81	0.79	0.91	6.46	45.00	1.25	1.50	2.19	3.13	7.36	2.51	0.30		0.29		1.65		3.54	32
DN25	mm	25.40	26.00	29.00	179.30	133.70	41.30	42.70	60.20	84.10	187.00	71.70	7.54	7/16 UNF	7.40	(F04)	42.00	M5X10	2.50	49
1"	inch	1.00	1.02	1.14	7.05	5.26	1.62	1.68	2.37	3.31	7.36	2.82	0.30		0.29		1.65		5.53	57
DN32	mm	31.80	32.00	35.00	189.40	139.70	48.40	43.60	73.00	97.00	237.00	86.70	8.71	7/16 UNF	8.50	(F05)	50.00	M6X12	3.60	69
1¼"	inch	1.25	1.26	1.38	7.45	5.50	1.91	1.72	2.87	3.82	9.33	3.41	0.34		0.33		1.97		7.96	80
DN40	mm	38.10	38.00	41.00	200.30	158.90	56.30	48.30	77.80	101.80	237.00	96.90	8.71	9/16 UNF	8.50	(F05)	50.00	M6X12	4.50	102
1½"	inch	1.50	1.50	1.61	7.88	6.25	2.22	1.90	3.06	4.01	9.33	3.82	0.34		0.33		1.97		9.95	118
DN50	mm	50.80	50.00	53.00	232.60	213.00	72.60	70.00	88.10	115.10	237.00	108.00	8.71	9/16 UNF	13.50	(F07)	70.00	M8X12	9.50	208
2"	inch	2.00	1.97	2.09	9.15	8.38	2.86	2.76	3.47	4.53	9.33	4.25	0.34		0.53		2.76		21.00	241

ISO 1127 / DIN 11850 Floating Ball 3 Piece

Components & materials

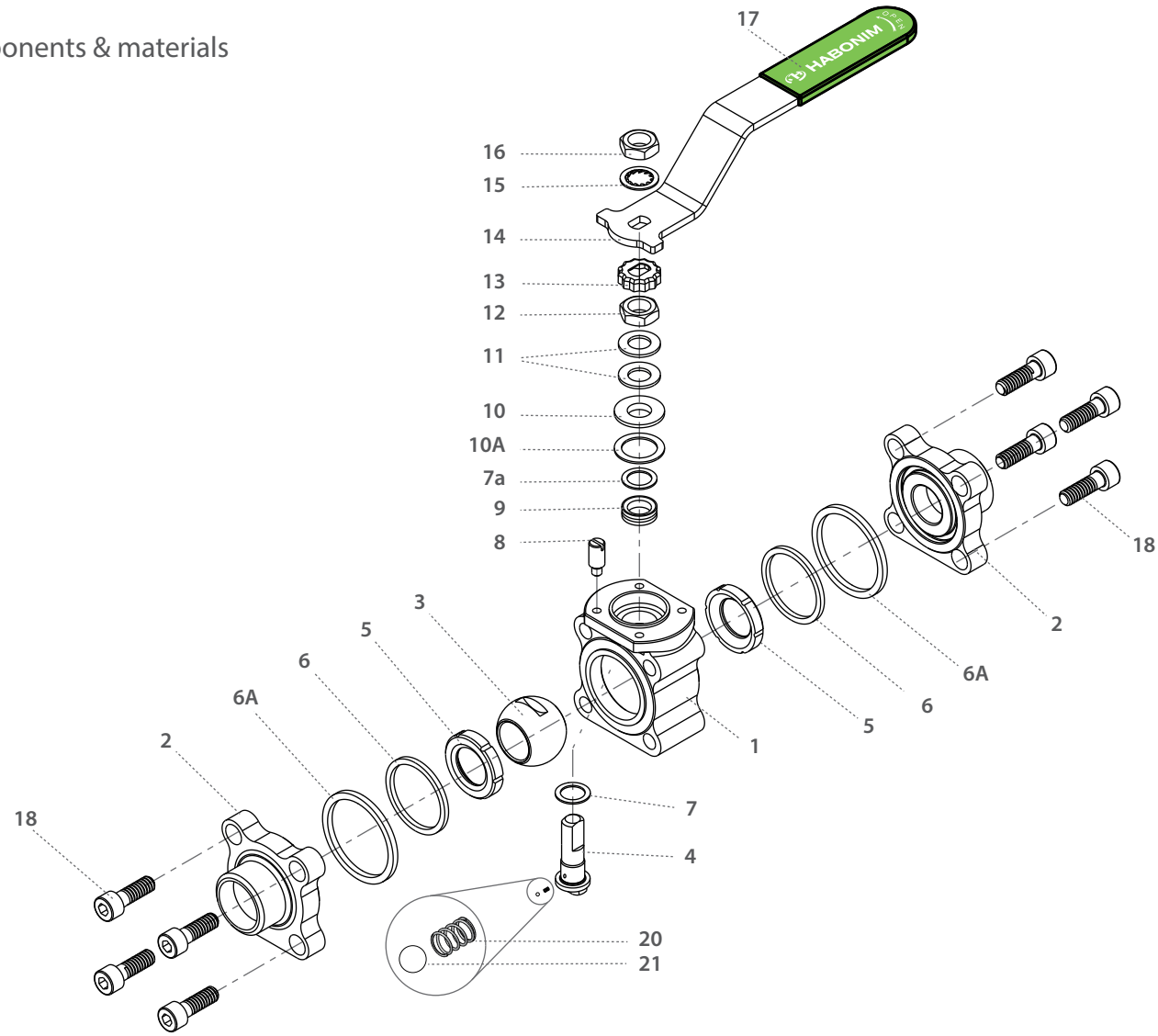

Item	Description	Material specification	Qty.
1	Body	Acc. Ordering Code	1
2	Ends	Acc. Ordering Code	2
3	Ball	Acc. Ordering Code	1
4	Stem	Acc. Ordering Code	1
5*	Seat	Acc. Ordering Code	2
6*	Inner seal	PTFE	2
6A*	Outer seal	Acc. Ordering Code	2
7*	Stem thrust seal	VIRGIN PEEK, PCTFE	1
7a*	Anti-abrasion ring	VIRGIN PEEK, PCTFE	1
8	Stop pin	S. Steel	1
9*	Stem seal	CF PTFE, TFM	1
10	Follower	S. Steel	1

Item	Description	Material specification	Qty.
10A*	Slide bearing	S. Steel	1
11	Disc spring	S. Steel	2
12	Stem nut	S. Steel	1
13	Locking clip	S. Steel	1
14	Handle	S. Steel	1
15	Serrated washer	S. Steel	1
16	Handle nut	S. Steel	1
17	Sleeve	PVC	1
18	Body bolt	S. Steel	8
20	Anti-static spring	S. Steel	1
21	Anti-static plunger	S. Steel	1
23	Tag (not shown)	S. Steel	1

* Repair kit components

ISO 1127 / DIN 11850 Floating Ball 3 Piece

Valve dimensions

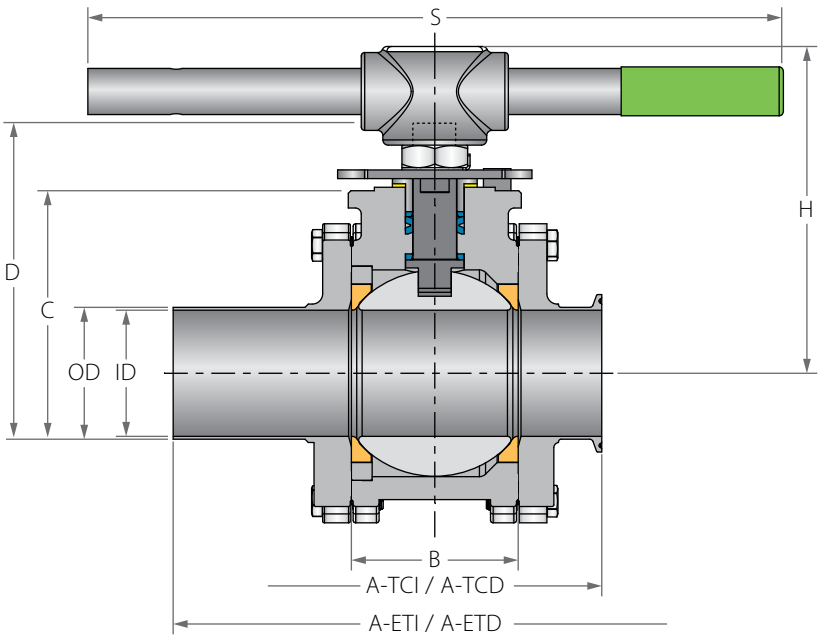

Habonim ETD end connections are designed in accordance to EN10357 – Series A.

Habonim ETI end connections are designed in accordance to EN10357 – Series C.

Dimensions of the end-connections tube ends are suitable to be welded on tubes that meet this standard.

For other tube sized ends please contact a Habonim representative.

Preparation for actuation

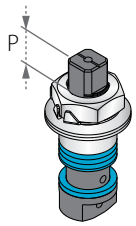

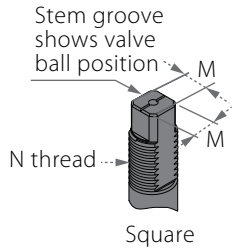

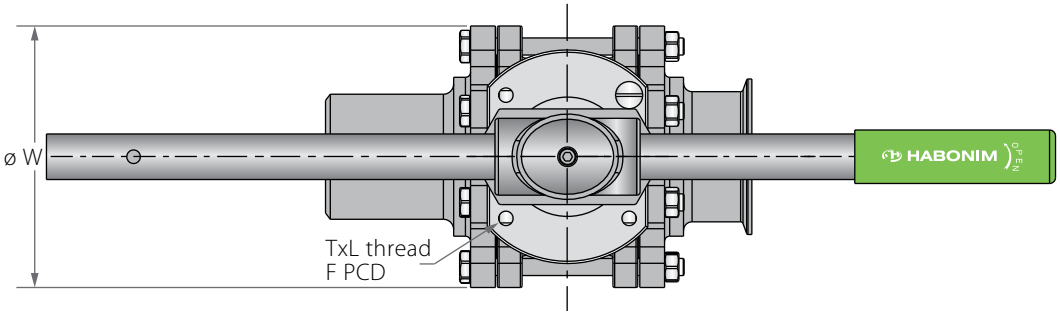

ISO 1127 Tube Sized

Std. port	Unit	Ball port	Pipe ID	Pipe OD	A ETI	A TCI	B	C	D	H	S	W	M	M-DD	N	P	Q	F		TxL	Weight kg/lb	Kv / Cv
DN65	mm	63.50	72.10	76.10	283.40	215.80	83.30	98.30	144.90	185.00	400.00	140.00	18.90	15.90	1"-14	16.70	22.70	(F10)	102.00	M10X20	13.70	300
2½"	inch	2.50	2.84	3.00	11.57	8.49	3.28	3.87	5.71	7.29	15.75	5.50	0.74	0.63	UNS-2A	0.66	0.89		4.02		30.30	348
DN80	mm	82.60	84.30	88.90	319.80	245.40	108.80	114.10	160.70	200.00	600.00	177.00	18.90	15.90	1"-14	16.70	22.70	(F10)	102.00	M10X20	23.70	615
3"	inch	3.25	3.32	3.50	12.59	9.66	4.28	4.49	6.33	7.89	23.62	6.97	0.74	0.63	UNS-2A	0.66	0.89		4.02		52.40	713
DN100	mm	100.00	109.70	114.30	390.00	268.80	123.00	124.00	170.50	211.00	600.00	217.00	18.90	15.90	1"-14	16.70	22.70	(F10)	102.00	M10X20	30.00	744
4"	inch	3.94	4.32	4.50	15.35	10.58	4.84	4.88	6.71	8.30	23.62	8.54	0.74	0.63	UNS-2A	0.66	0.89		4.02		66.30	863

DIN 11850 Tube Sized

Std. port	Unit	Ball port	Pipe ID	Pipe OD	A ETD	A TCD	B	C	D	H	S	W	M	M-DD	N	P	Q	F		TxL	Weight kg/lb	Kv / Cv
DN65	mm	63.50	66.00	70.00	283.40	215.80	83.30	98.30	144.90	185.00	400.00	140.00	18.90	15.90	1"-14	16.70	22.70	(F10)	102.00	M10X20	13.70	300
2½"	inch	2.50	2.60	2.76	11.57	8.49	3.28	3.87	5.71	7.29	15.75	5.50	0.74	0.63	UNS-2A	0.66	0.89		4.02		30.30	348
DN80	mm	82.60	81.00	85.00	348.80	245.40	108.80	114.10	160.70	200.00	600.00	177.00	18.90	15.90	1"-14	16.70	22.70	(F10)	102.00	M10X20	23.70	615
3"	inch	3.25	3.19	3.35	13.73	9.66	4.28	4.49	6.33	7.89	23.62	6.97	0.74	0.63	UNS-2A	0.66	0.89		4.02		52.40	713
DN100	mm	100.00	100.00	104.00	390.00	268.80	123.00	124.00	170.50	211.00	600.00	217.00	18.90	15.90	1"-14	16.70	22.70	(F10)	102.00	M10X20	30.00	744
4"	inch	3.94	3.94	4.09	15.35	10.58	4.84	4.88	6.71	8.30	23.62	8.54	0.74	0.63	UNS-2A	0.66	0.89		4.02		66.30	863

ISO 1127 / DIN 11850 Floating Ball 3 Piece

Components & materials

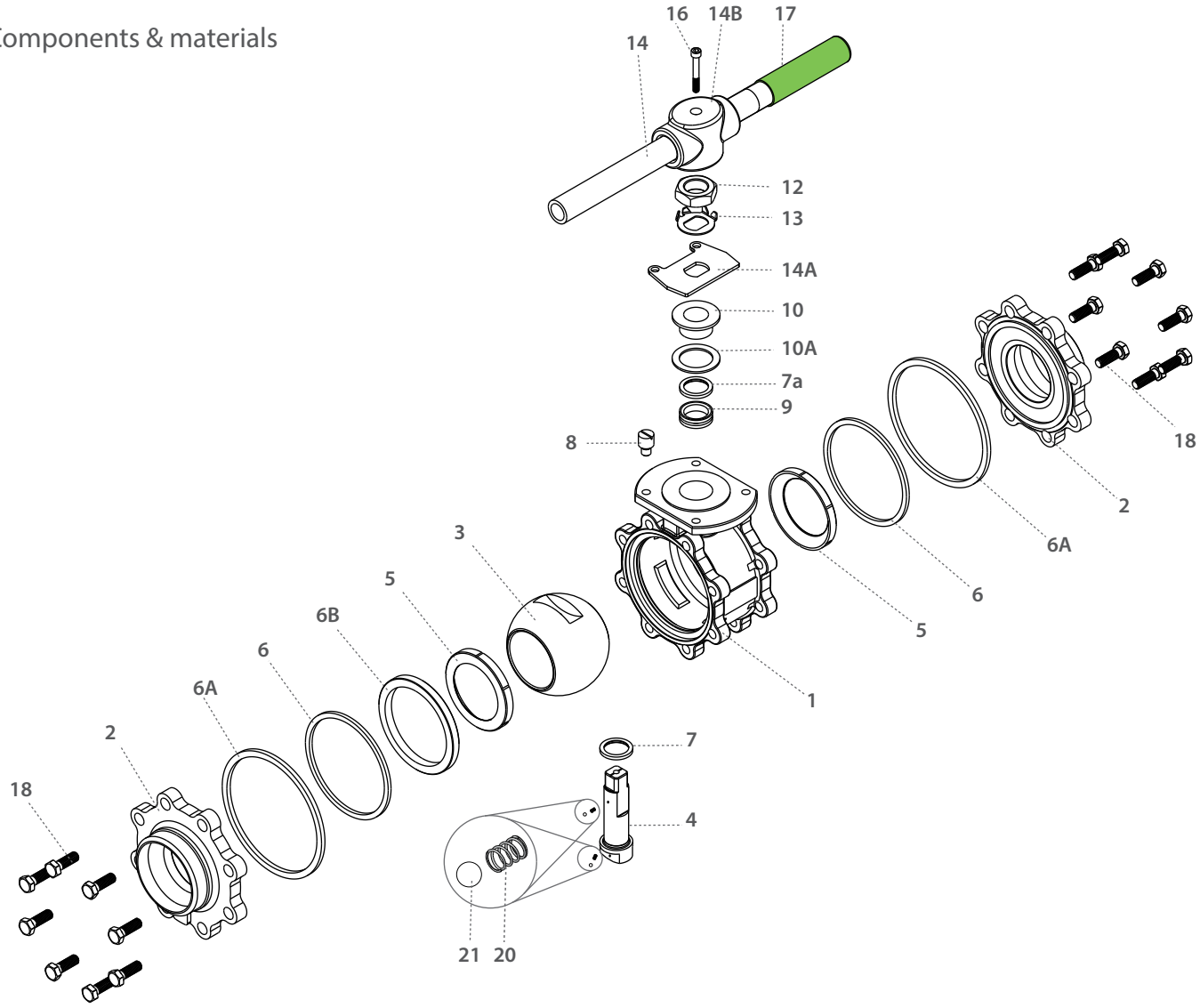

Item	Description	Material specification	Qty.
1	Body	Acc. Ordering Code	1
2	Ends	Acc. Ordering Code	2
3	Ball	Acc. Ordering Code	1
4	Stem	Acc. Ordering Code	1
5*	Seat	Acc. Ordering Code	2
6*	Inner seal	PTFE	2
6A*	Outer seal	Acc. Ordering Code	2
6B	Support ring	S. Steel	1
7*	Stem thrust seal	VIRGIN PEEK, PCTFE	1
7a*	Anti-abrasion ring	VIRGIN PEEK, PCTFE	1
8	Stop pin	S. Steel	1
9*	Stem seal	CF PTFE, TFM	1
10	Follower	S. Steel	1
10A*	Slide bearing	S. Steel	1

Item	Description	Material specification	Qty.
11	Disc spring	S. Steel	2
12	Stem nut	S. Steel	1
13	Tab lock washer	S. Steel	1
14	Handle	S. Steel	1
14A	Stop plate	S. Steel	1
14B	Wrench head	S. Steel	1
16	Wrench bolt	S. Steel	1
17	Sleeve	PVC	1
18	Body bolts	S. Steel	8-12
20	Anti-static spring	S. Steel	2
21	Anti-static plunger	S. Steel	2
23	Tag (not shown)	S. Steel	1

* Repair kit components

Floating Ball 3 Piece - Ordering Code System

"Mandatory option" options are marked with green background | "Standard offer" options are marked with light green background

1	2	3	4	5	6	7	8	9	10	11	12	13	14	15	16	17	18	19	20	21	22	23	24	.	.	30
1	0				Y	4	7	G	-	6	6	6	6	A	T	G	/	E	T	I		-				
Size		Features				Series		Design		Body material	Ends material	Ball/Stem material		Seat material	Inner Seal	Outer Seal		End Connection					Special features			

Size (1-2)		
Code	inch	mm
03	⅜"	10
05	½"	15
07	¾"	20
10	1"	25
12	1¼"	32
15	1½"	40
20	2"	50
25	2½"	65
30	3"	80
40	4"	100

Features (3-6)	
Y	Tube Sized port
F	Fire safe
O	Oxygen service
V	Vacuum service
Q	Cavity filler seats
I	High purity Class 10000
H*	Hydrogen Service

* for material selection - see Hydrogen Service chapter

Series (7-8)	
47	Floating ball 3 piece

Design (9)	
W	Total HermetiX Integrity package
G	Total HermetiX Integrity package - FDA compliant

Body material (11)	
6	S. SteelCF8M/CF3M
W	Hasteloy-C22

Ends material (12)	
6	S. SteelCF8M/CF3M
W	Hasteloy-C22

Ball material (13)	
6	S. Steel
W	Hasteloy-C22

Stem material (14)	
6	S. Steel316L
M	High Strength S. Steel
W	Alloy-C22

Seat material (15)	
A	TFM
L	Virgin Peek

Inner Seal Material (16)	
T	PTFE

Outer Seal material (17)	
A	TFM
G	Expanded graphite

End Connection (19-22)	
Welded	
ETI	Extended buttweld ISO 1127
ETD	Extended buttweld DIN 11850
Clamp	
TCI	Tri-Clamp for ISO 1127
TCD	Tri-Clamp for DIN 11850

Special Features (24-30)	
P250	Ball with Upstream Relief Hole
SRS	Self Relief Seat
B	Body made from bar stock
EP	Electropolished
J2N05	Jacketed valve - number of ports(2), type(NPT) and size(½")

FLOATING BALL

3A
3 PIECE

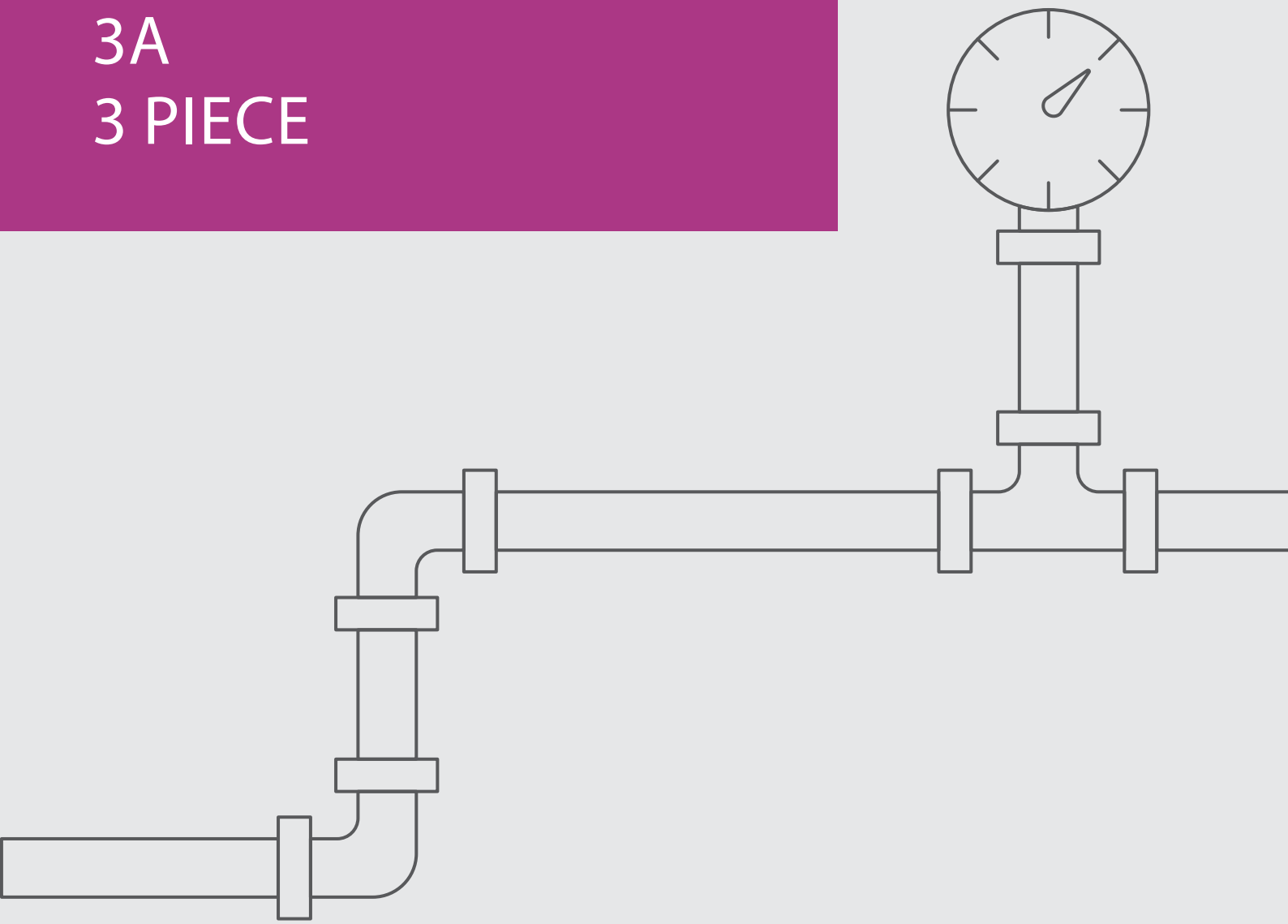

3A Floating Ball 3 Piece

Valve dimensions

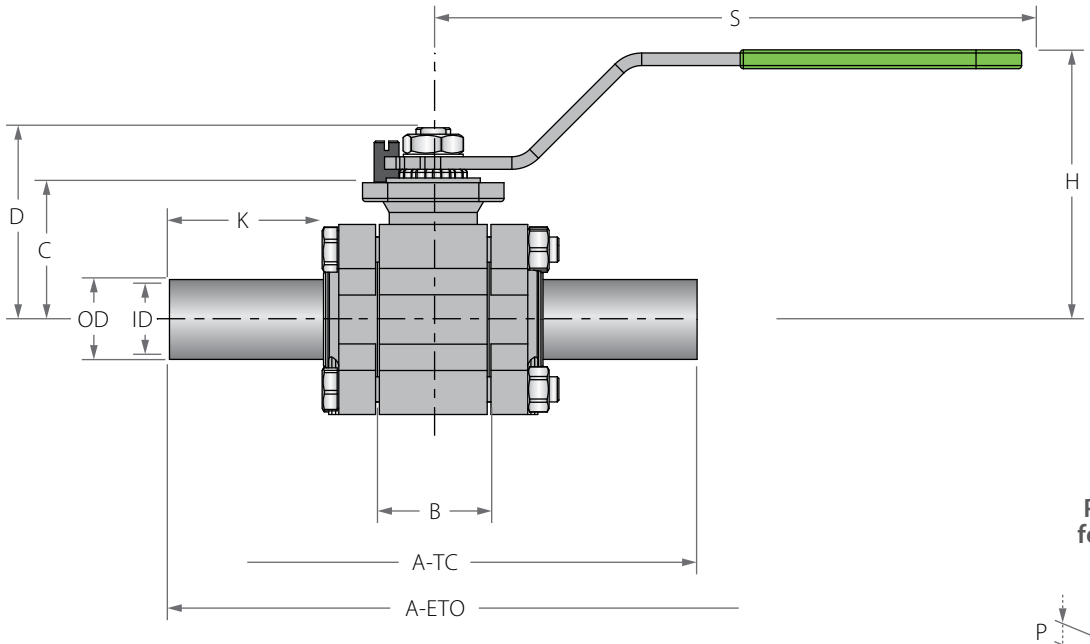

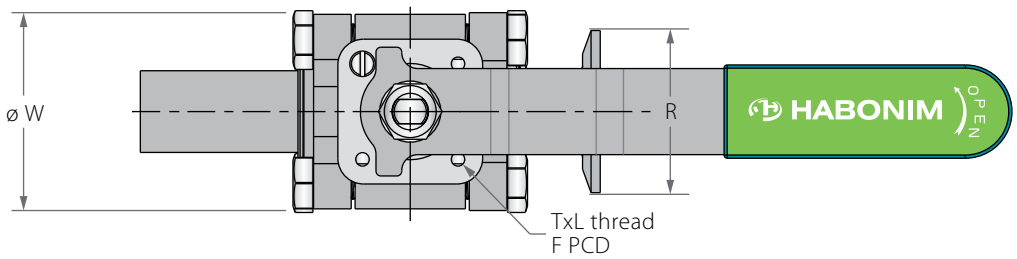

Preparation for actuation

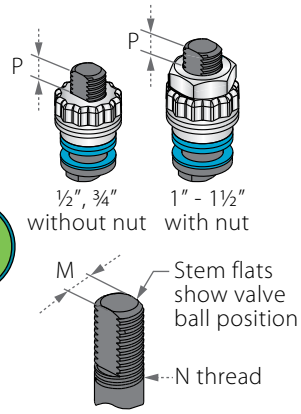

Std. port	Unit	OD	ID	A ETO	A TC	B	C	D	H	K	S	W	R TC	M	M-DD	N	P	F		TxL	Weight kg/lb	Kv Cv
DN15	mm	12.70	9.40	137.00	89.00	20.60	29.00	38.00	61.60	41.50	150.00	45.75	25.20	5.54	-	⅜" UNF	6.65	(F03)	36.00	M5X10	0.90	8
½"	inch	0.50	0.37	5.39	3.50	0.81	1.14	1.50	2.42	1.63	5.91	1.80	0.99	0.22	-		0.26		1.42		2.00	9
DN20	mm	19.05	15.75	147.00	102.00	24.60	36.00	45.00	67.90	43.90	150.00	52.10	25.20	5.54	-	⅜" UNF	6.65	(F03)	36.00	M5X10	1.00	29
¾"	inch	0.75	0.62	5.79	4.00	0.97	1.42	1.77	2.67	1.73	5.91	2.05	0.99	0.22	-		0.26		1.42		2.10	34
DN25	mm	25.40	22.10	168.00	118.00	35.50	43.50	61.00	84.80	43.90	187.00	60.45	50.40	7.54	-	7/16" UNF	7.40	(F04)	42.00	M5X10	1.70	53
1"	inch	1.00	0.87	6.61	4.65	1.40	1.71	2.41	3.34	1.73	7.36	2.38	1.98	0.30	-		0.29		1.65		3.80	62
DN40	mm	38.10	34.80	186.00	141.00	50.00	55.50	85.00	107.10	44.00	236.00	79.15	50.40	8.71	-	9/16" UNF	8.50	(F05)	50.00	M6X12	3.50	150
1½"	inch	1.50	1.37	7.31	5.57	1.97	2.19	3.35	4.22	1.73	9.29	3.12	1.98	0.34	-		0.33		1.97		7.70	175
DN50	mm	50.80	47.50	223.00	184.00	72.70	70.00	112.10	143.10	45.00	256.00	108.00	64.20	-	13.90	M20x2.5	14.60	(F07)	70.00	M8X12	9.40	410
2"	inch	2.00	1.87	8.77	7.23	2.86	2.76	4.41	5.63	1.77	10.08	4.25	2.53	-	0.55		0.57		2.76		20.80	480

3A Floating Ball 3 Piece

Components & materials

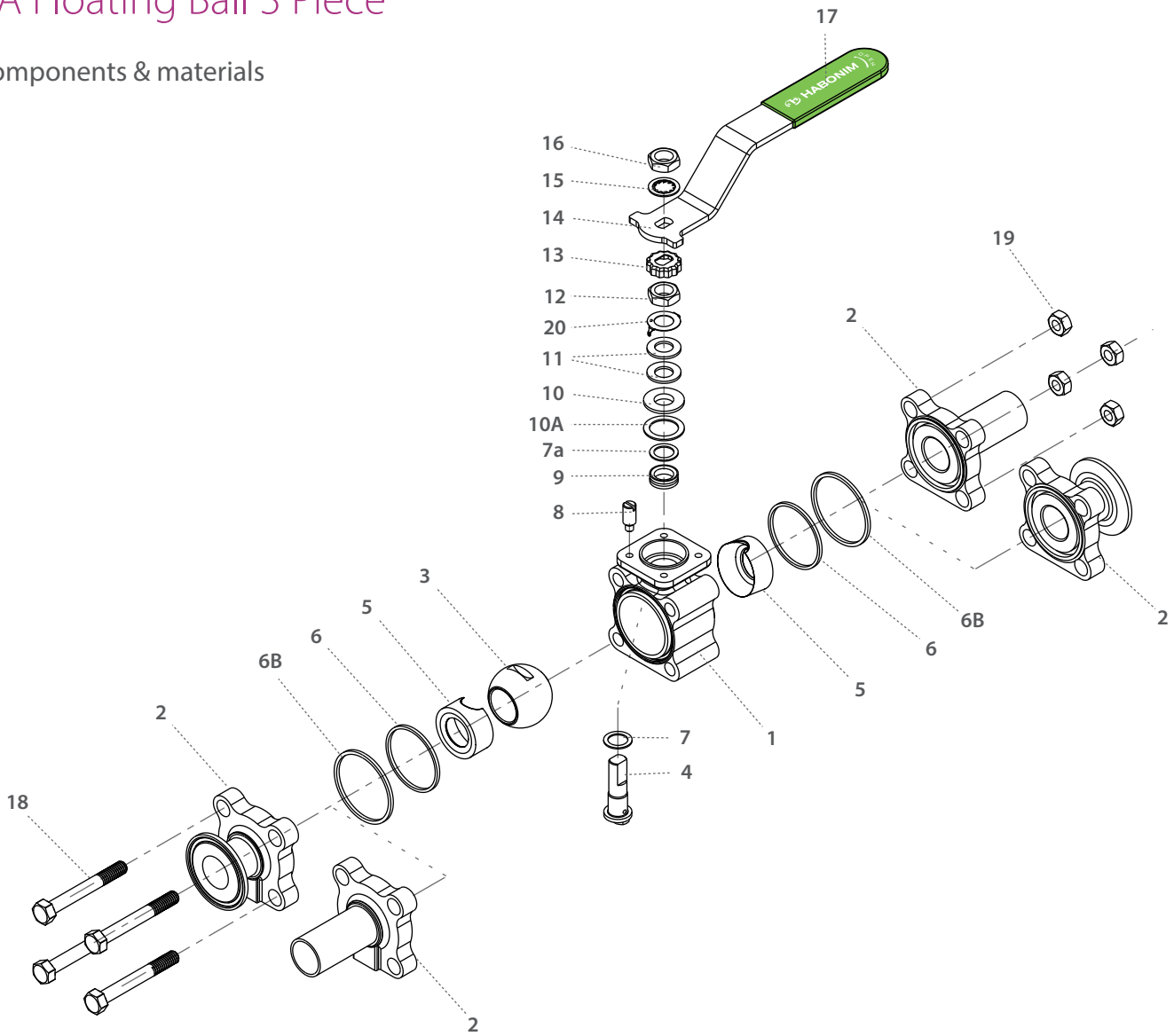

Item	Description	Material specification	Qty.
1	Body	Acc. Ordering Code	1
2	Ends	Acc. Ordering Code	2
3	Ball	Acc. Ordering Code	1
4	Stem	Acc. Ordering Code	1
5*	Seat	Acc. Ordering Code	2
6*	Body inner seal	Acc. Ordering Code	2
6B*	Body outer seal	Acc. Ordering Code	2
7*	Stem thrust seal	Virgin PEEK	1
7a*	Anti-abrasion ring	Virgin PEEK	1
8	Stop pin	S. Steel	1
9*	Stem seal	TFM	1
10	Follower	S. Steel	1
10A*	Slide bearing	S. Steel	1

Item	Description	Material specification	Qty.
11	Disc spring	S. Steel	2
12	Stem nut	S. Steel	1
13	Locking clip	S. Steel	1
14	Handle	S. Steel	1
15	Serrated washer	S. Steel	1
16	Handle nut	S. Steel	1
17	Sleeve	PVC	1
18	Body bolt	S. Steel	4
19	Body nut	S. Steel	4
20	Anti-static device	S. Steel	1
23	Tag (not shown)	S. Steel	1

* Repair kit components

3A Floating Ball 3 Piece - Ordering Code System

"Mandatory option" options are marked with green background | "Standard offer" options are marked with light green background

1	2	3	4	5	6	7	8	9	10	11	12	13	14	15	16	17	18	19	20	21	22	23	24	25	26	.	30
1	0				L	4	7	G	-	6	6	6	6	A	A	A	/	E	T	O		-					
Size		Features				Series		Design		Body/End material		Ball/Stem material		Seat	Inner Seal	Outer Seal		End Connection					Special features				

Size (1-2)		
Code	inch	mm
02	¼"	8
03	⅜"	10
05	½"	15
07	¾"	20
10	1"	25
15	1½"	40
20	2"	50

Features (3-6)	
L	3A Compliance

Series (7-8)	
47	3A Clean valves

Design (9)	
G	Total HermetiX Integrity package - FDA compliant

Body/Ends material (11-12)	
6	CF3M
P	S. St. 316L Forged
3	S. St. DIN 1.4435 Forged
W	ALLOY-C22

Ball material (13)	
6	ASTM A479 S. Steel316L
W	ALLOY-C22

Stem material (14)	
6	ASTM A479 S. Steel316L
W	ALLOY-C22

Seat material (15)	
A	TFM

Inner Seal Material (16)	
A	TFM

Outer Seal Material (17)	
A	TFM

End connections (19-23)	
Welded	
ETO	Extended tube OD
Clamp	
TC	Tri-Clamp

Special Features (24-30)	
B	Valve made from rolled bar

R48

Sanitary Valves

FLOATING BALL

ASME BPE
FLUSH TANK
3 PIECE

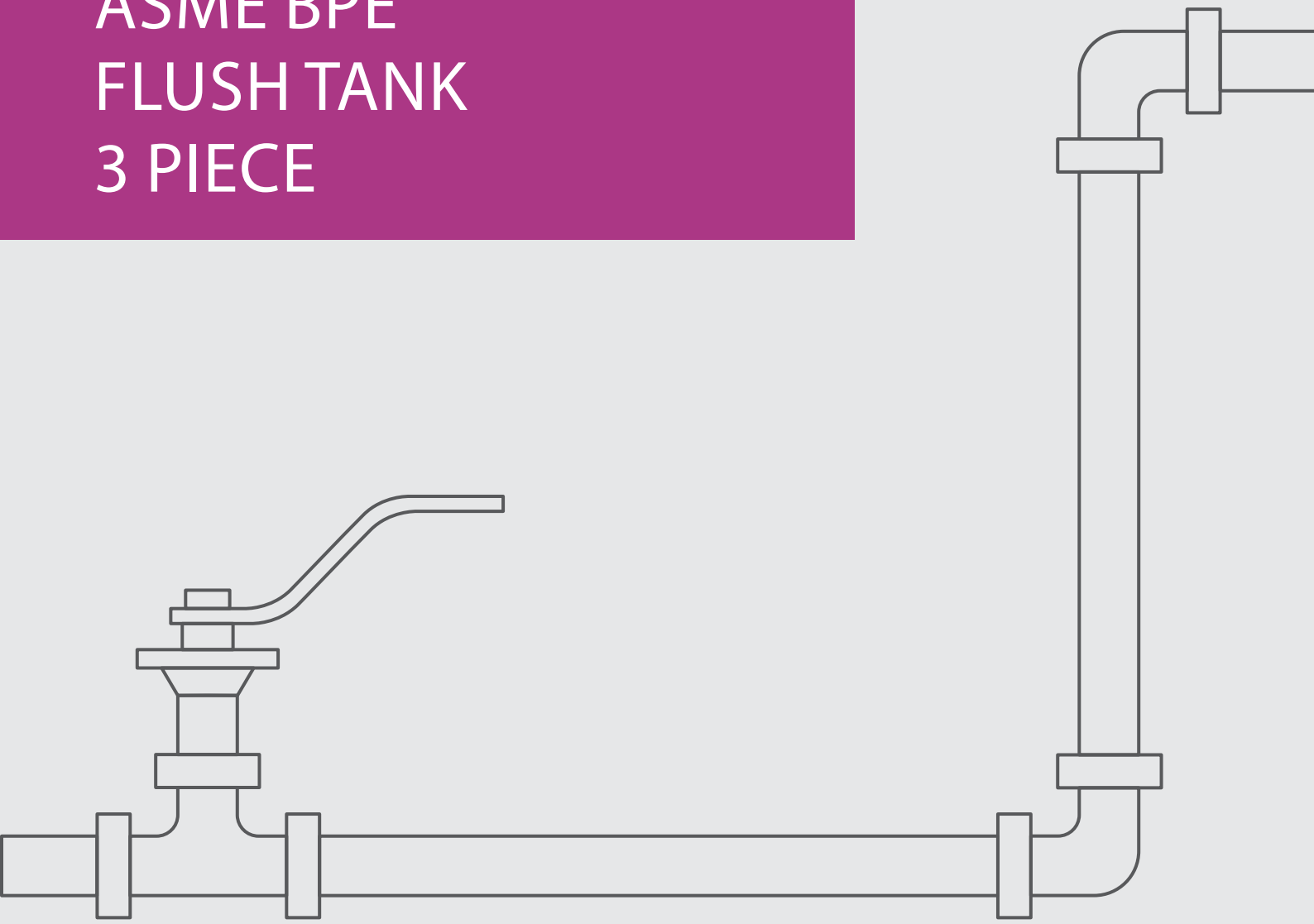

ASME BPE Flush Tank Floating Ball

Valve dimensions

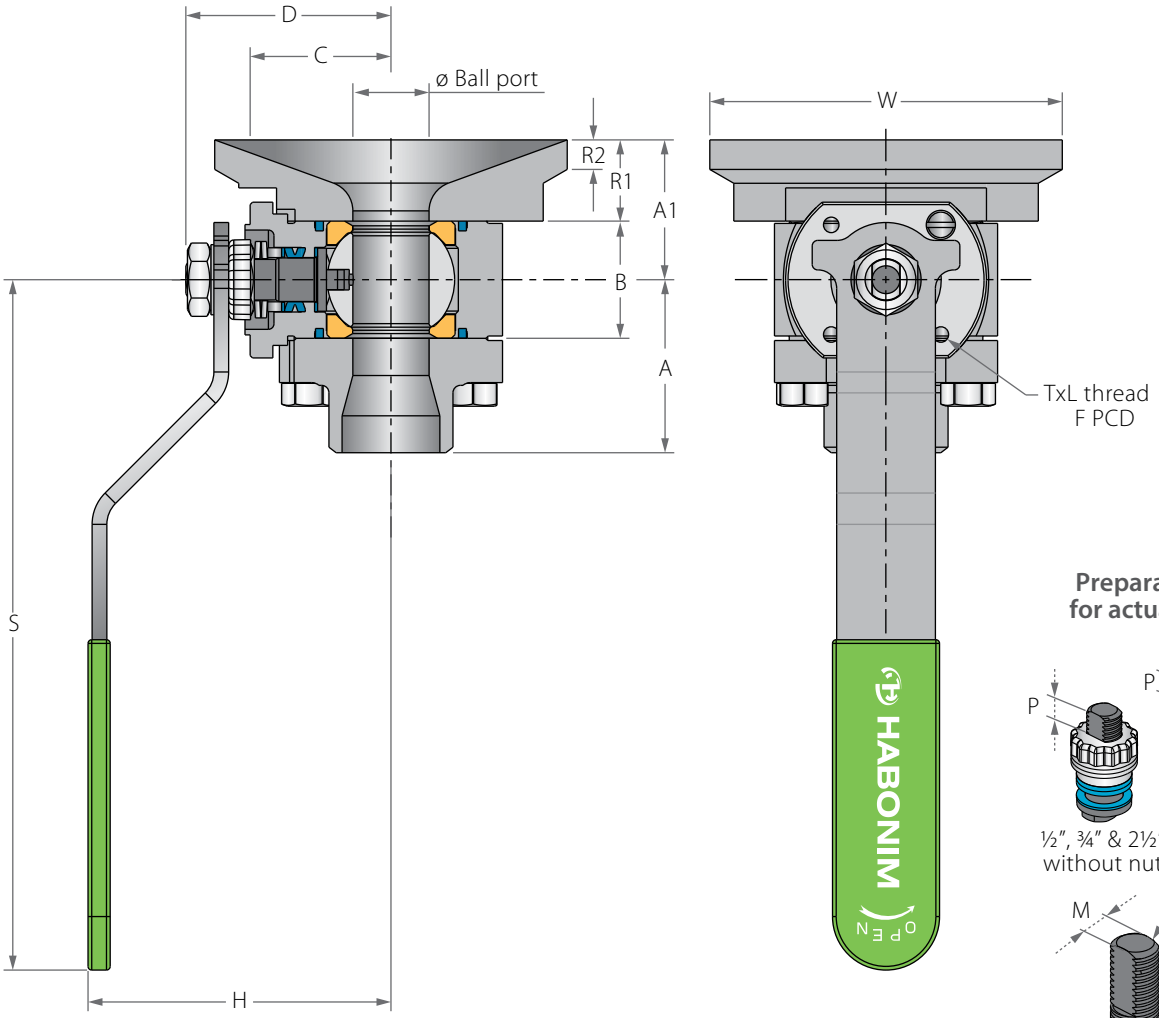

Preparation for actuation

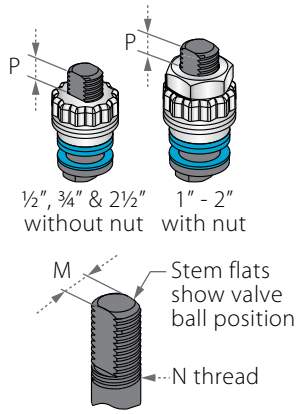

Std. port	Full port	Unit	Ball port	R1	R2	A	A1	B	C	D	H	S	W	M	N	P	F		TxL	Weight kg/lb	Kv / Cv
DN15	DN10	mm	11.15	21.00	6.00	33.00	31.30	20.60	29.00	38.70	61.50	150.00	60.00	16.00	⅜	6.65	(F03)	36.00	M5X10	0.8	6.9
½"	⅜"	inch	0.44	0.83	0.24	1.30	1.24	0.81	1.14	1.52	2.42	5.91	2.36	0.63	UNF	0.26		1.42		1.9	8.0
DN20	DN15	mm	14.30	20.60	6.00	35.30	32.85	24.50	31.40	40.30	63.90	150.00	80.00	5.54	⅜	6.65	(F03)	36.00	M5X10	1.2	10
¾"	½"	inch	0.56	0.81	0.24	1.39	1.29	0.97	1.24	1.59	2.52	5.91	3.15	0.22	UNF	0.26		1.42		2.6	12
DN25	DN20	mm	20.60	21.50	8.00	46.90	37.35	31.70	38.20	55.60	79.40	187.00	95.50	7.54	7/16	7.40	(F04)	42.00	M5X10	2.1	28
1"	¾"	inch	0.81	0.85	0.31	1.85	1.47	1.25	1.50	2.19	3.13	7.36	3.76	0.30	UNF	0.29		1.65		4.6	32
DN32	DN25	mm	25.50	24.00	8.00	54.00	45.00	41.25	195.40	212.90	236.40	230.00	69.00	7.54	7/16	7.40	(F04)	42.00	M5X10	3.2	49
1¼"	1"	inch	1.00	0.94	0.31	2.13	1.77	1.62	7.69	8.38	9.31	9.06	2.72	0.30	UNF	0.29		1.65		7.0	57
DN40	DN32	mm	31.80	27.00	8.00	57.80	51.20	48.40	43.60	73.00	97.00	237.00	113.00	8.71	9/16	8.50	(F05)	50.00	M6X12	4.5	69
1½"	1"	inch	1.25	1.06	0.31	2.28	2.01	1.91	1.72	2.87	3.82	9.33	4.45	0.34	UNF	0.33		1.97		9.9	80
DN50	DN40	mm	38.10	29.00	10.00	64.00	57.15	56.30	48.30	77.80	101.80	237.00	138.00	8.71	9/16	8.50	(F05)	50.00	M6X12	5.8	102
2"	1½"	inch	1.50	1.14	0.39	2.52	2.25	2.22	1.90	3.06	4.01	9.33	5.43	0.34	UNF	0.33		1.97		12.8	118
DN65	DN50	mm	50.80	30.00	10.00	79.00	66.30	72.60	70.00	88.10	115.10	237.00	164.00	8.71	9/16	13.50	(F07)	70.00	M8X12	11.1	208
2½"	2"	inch	2.00	1.18	0.39	3.11	2.61	2.86	2.76	3.47	4.53	9.33	6.46	0.34	UNF	0.53		2.76		24.4	241

ASME BPE Flush Tank Floating Ball

Components & materials

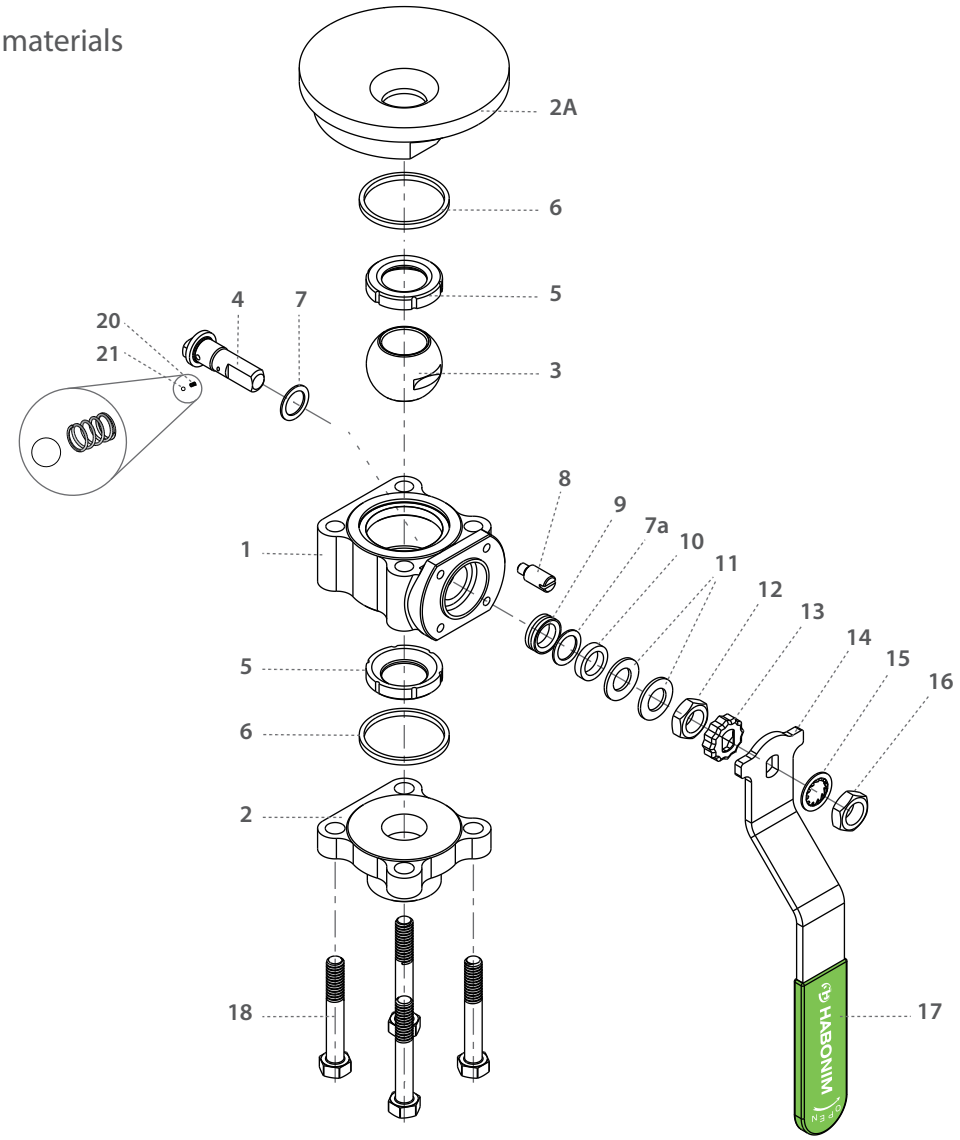

Item	Description	Material specification	Qty.
1	Body	Acc. Ordering Code	1
2	End	Acc. Ordering Code	
2A	Pad	Acc. Ordering Code	1
3	Ball	Acc. Ordering Code	1
4	Stem	Acc. Ordering Code	1
5*	Seat	Acc. Ordering Code	2
6*	Body seal	PTFE	2
7*	Stem thrust seal	Virgin PEEK	1
7a**	Anti-abrasion ring	Virgin PEEK	1
8	Stop pin	A582 303	1
9*	Stem seal	TFM	1
10	Follower	S. Steel	1
11	Disc spring	S. Steel	2

Item	Description	Material specification	Qty.
12	Stem nut	S. Steel	1
13	Locking clip	S. Steel	1
14	Handle	S. Steel	1
15	Serrated washer	S. Steel	1
16	Handle nut	S. Steel	1
17	Sleeve	PVC	1
18	Bolt	S. Steel	4
20	Anti-static spring	S. Steel	1
21	Anti-static plunger	S. Steel	1
23	Tag (not shown)	S. Steel	1

* Repair kit components
** Only with HermetiX™ stem seal

ASME BPE Flush Tank Valves

Valve dimensions

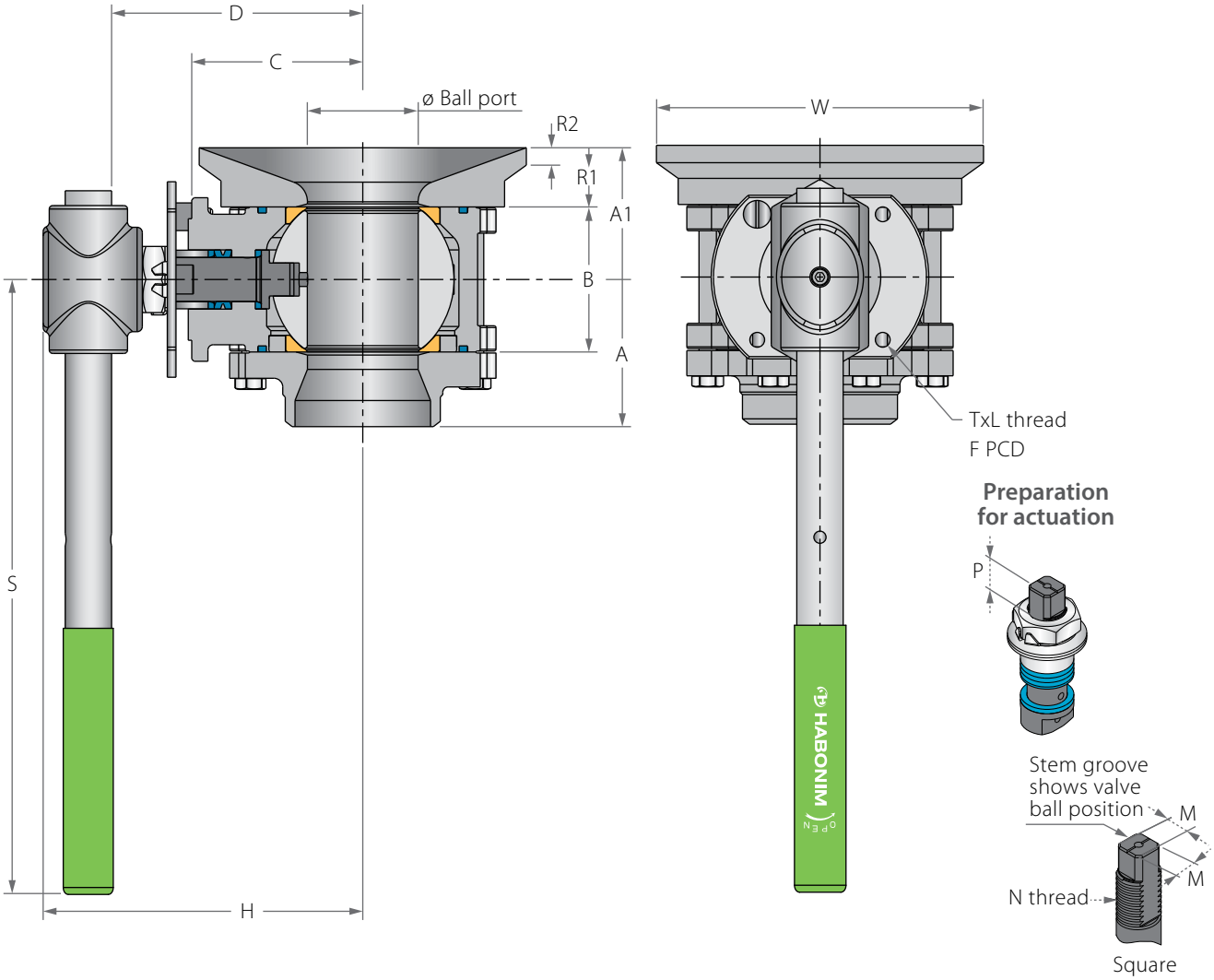

Std. port	Full port	Unit	Ball port	R1	R2	A	A1	B	C	D	H	S	W	M-DD	M	N	P	F		TxL	Weight kg/lb	Kv / Cv
DN80	DN65	mm	63.50	34.00	10.00	84.50	75.65	83.30	98.30	144.90	185.00	400.00	188.00	15.90	18.90	1"-14	16.70	(F10)	102.00	M10x20	15.5	300
3"	2½"	inch	2.50	1.34	0.39	3.33	2.98	3.28	3.87	5.71	7.29	15.75	7.40	0.63	0.74	UNS-2A	0.66		4.02		34.1	348
DN100	DN80	mm	82.60	38.00	10.00	107.00	92.40	108.80	114.10	160.70	200.00	600.00	226.00	15.90	18.90	1"-14	16.70	(F10)	102.00	M10x20	26.0	615
4"	3"	inch	3.25	1.50	0.39	4.21	3.64	4.28	4.49	6.33	7.89	23.62	6.97	0.63	0.74	UNS-2A	0.66		4.02		57.2	713
	DN100	mm	100.00	45.00	12.00	119.50	106.50	123.00	124.00	170.50	211.00	600.00	252.00	15.90	18.90	1"-14	16.70	(F10)	102.00	M10x20	34.0	744
	4" FB	inch	3.94	1.77	0.47	4.70	4.19	4.84	4.88	6.71	8.30	23.62	8.54	0.63	0.74	UNS-2A	0.66		4.02		74.8	863

ASME BPE Flush Tank Valves

Components & materials

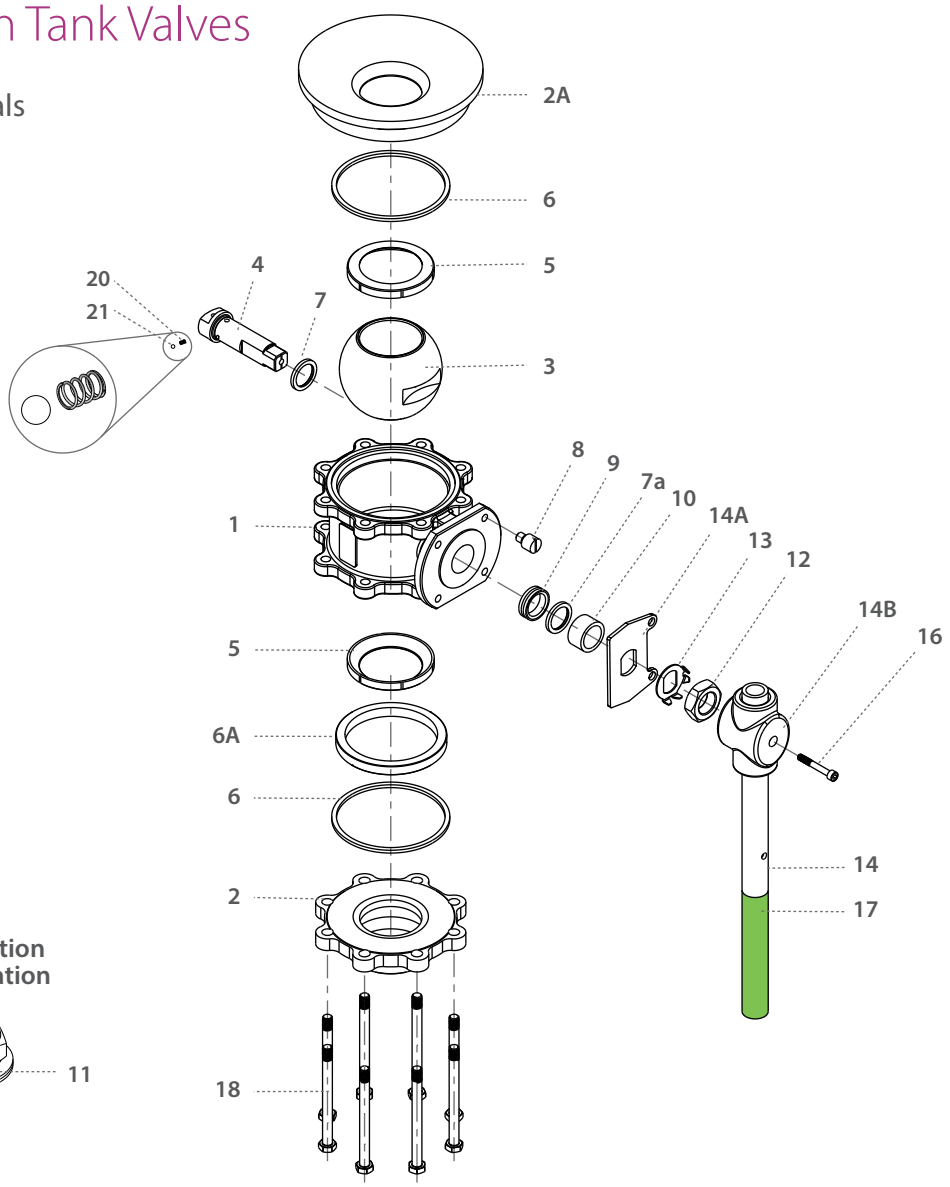

Preparation for actuation

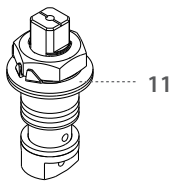

Item	Description	Material specification	Qty.
1	Body	Acc. Ordering Code	1
2	End	Acc. Ordering Code	1
2A	Pad	Acc. Ordering Code	1
3	Ball	Acc. Ordering Code	1
4	Stem	Acc. Ordering Code	1
5*	Seat	Acc. Ordering Code	2
6*	Body seal	PTFE	2
6A	Support Ring	S. Steel	1
7*	Stem thrust seal	Virgin PEEK	1
7a**	Anti-abrasion ring	Virgin PEEK	1
8	Stop pin	S. Steel	1
9*	Stem seal	TFM	1
10	Follower	S. Steel	1

Item	Description	Material specification	Qty.
11	Disc spring	S. Steel	2
12	Stem nut	S. Steel	1
13	Tab lock washer	S. Steel	1
14	Wrench handle	A240 316L	1
14A	Stop plate	S. Steel	1
14B	Wrench head	S. Steel	1
16	Wrench bolt	S. Steel	1
17	Sleeve	PVC	1
18	Body bolts	S. Steel	6-10
20	Anti-static spring	S. Steel	2
21	Anti-static plunger	S. Steel	2
23	Tag (not shown)	S. Steel	1

* Repair kit components
** Only with HermetiX™ gland packing

ASME BPE Floating Ball 3 Piece - Ordering Code System

"Mandatory option" options are marked with green background | "Standard offer" options are marked with light green background

1	2	3	4	5	6	7	8	9	10	11	12	13	14	15	16	17	18	19	20	21	22	23	24	.	.	30
1	0				R	4	8	G	-	6	6	6	6	A	A	-	/	E	T	I		-				
Size		Features				Series		Design		Body material	Ends material	Ball/Stem material		Seat material	Seal material			End Connection					Special features			

Size (1-2)		
Code	inch	mm
02	¼"	10
03	⅜"	10
05	½"	15
07	¾"	20
10	1"	25
15	1½"	40
20	2"	50
25	2½"	65
30	3"	80
40	4"	100
60	6"	150

Features (3-6)	
R	Flush tank
F	Fire Safe
D	Diverter, Bottom entry
S	Diverter, Side entry
Q	Cavity filler seats

Series (7-8)	
48	ASME BPE Clean valves

Design (9)	
G	Total HermetiX Integrity package - FDA compliant

Body/Ends material (11-12)	
6	CF3M
3	S. St. EN10222-5 Forged
P	S. St. 316L Forged
W	ALLOY-C22

Ball/Stem material (13-14)	
6	ASTM A479 S. Steel316L
W	ALLOY-C22

Seat material (15)	
A	TFM
L	Virgin Peek

Seal Material (16)	
A	TFM

(17)	

End Connection (19-22)	
Welded	
ETO	Extended tube OD
Clamp	
TC	Tri-Clamp

Special Features (24-30)	
G32	ASME BPE surface designation SF1 - Internal polishing level of 0.51 µ-m, 20 µ-in Ra max.
E24	ASME BPE surface designation SF5 - Internal polishing & EP level of 0.51 µ-m, 20 µ-in Ra max.
E32	ASME BPE surface designation SF4 - Internal polishing & EP level of 0.38 µ-m, 15 µ-in Ra max.
B	Valve made from rolled bar

About Habonim

Ball Valves & Actuators for the most demanding, challenging and hazardous applications are our passion and profession for the last 70 years.

We believe in designing, manufacturing and supplying control and shutoff components and solutions that improves the overall safety, integrity and sustainability of the systems they are installed in.

Designed, manufactured and tested according to the highest standards, our products allow us to partner within systems that flow and control varied gases and liquids in diverse markets especially where extreme temperatures and pressures are involved, hazardous materials are used and system performances are critical.

We are leading in cryogenic ball valve-based control solutions, emergency shutoff and specially designed solutions.

Believing that supplying and developing the most effective, safe and reliable products for the global leaders in the LNG and Gas distribution market continually challenges us to improve our capabilities and products.

Best coping with our prestigious customers' most challenging requirements technically, operationally and commercially is our promise fulfilled for decades.

Performing in Demanding Applications

YP0005125 CAT-PRD-SNTRY-M ver04_010522

HABONIM
Industrial Valves & Actuators

Habonim USA 1 866 261 8400 | **Habonim EU** +31 79 204 0780 | **Habonim Singapore** +65 8127 0221 | **Habonim China** +86 21 58056370
Habonim Israel +972 (0) 4 691 4911 | **Habonim UK** +44 1633 484554 | **Habonim Australia** +65 8127 0221 | **www.habonim.com**